EASY **DVN 94030 TTC BK**

90cm Vertical Decorative Hood with Touch control and Rim Extraction

LED

Stop Delay Timer

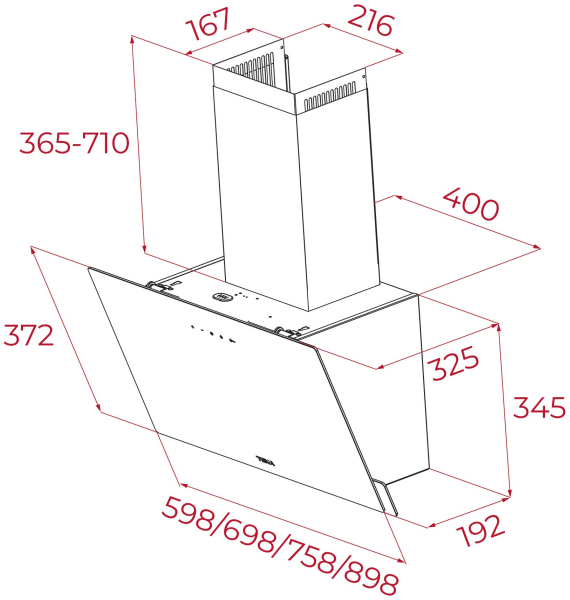

REFERENCE

REF: 112950008 EAN: 8434778010800

FEATURES

Urban Colors Edition
Decorative vertical hood
Touch control
Rim extraction
2 speeds + 1 intensive
Free Outlet exhaust capacity (m3/h): 460
Intensive speed exhaust capacity (m3/h): 425
Max speed exhaust capacity (m3/h): 410
Min speed exhaust capacity (m3/h): 380
Intensive speed sound level (dBA): 71
Max speed sound level (dBA): 67
Min speed sound level (dBA): 65
2 LED lamps
1 Aluminum Filter
Stop delay timer
Anti-return valve included
Outlet reduction included
Optional recirculation kit with tube cover installation: SET D13CTP
Optional Charcoal Filter: D9C

DIMENSIONS

Product height (mm): 690-1035
Product width (mm): 898
Product depth (mm): 325
Product length (mm):
Net weight (Kg): 9,82

TECHNICAL DETAILS

Energy Efficiency Class: C
Noise (LwA) Min Speed (dB): 65
Noise (LwA) Max Speed (dB): 66
Noise (LwA) Boost Speed (dB): 67
Ø Outlet (mm): 150

COLOURS

112950008 Black

112950009 White