TOTAL **Frame**

Kitchen Tap Mixer with high swivel spout

Anti-Scale Aerator

Swivel Spout

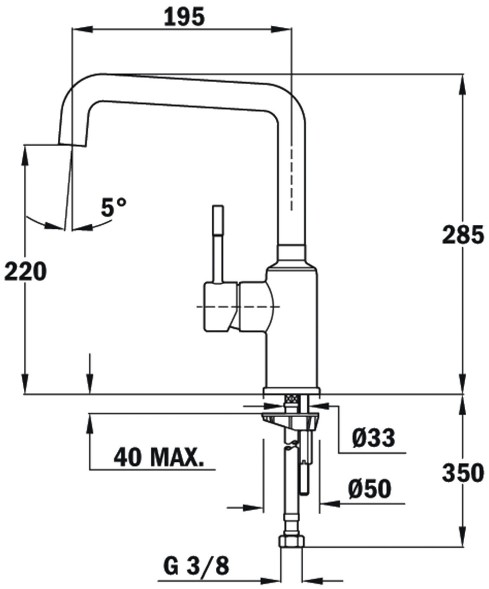

REFERENCE

REF: 509150200 EAN: 8421152076453

FEATURES

High spout kitchen tap
Swivel spout
Anti-scale aerator
Cartridge with ceramic discs of high resistance
Highly precise temperature control
Greater handling sensitivity with smoother movements
3/8" flexible inlet pipes

DIMENSIONS

Product height (mm): 285
Product width (mm):
Product depth (mm):
Product length (mm):
Net weight (Kg): 2,55

COLOURS

509150200 Chrome