IN 995
Kitchen tap mixer with high swivel spout and anti-scale aerator

Anti-scale aerator

Swivel spout

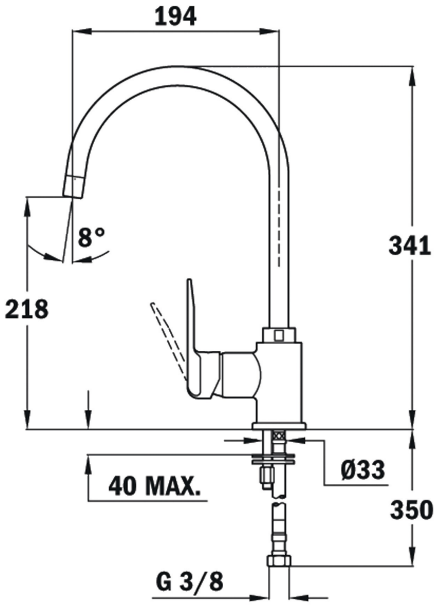

REFERENCE

REF: 53995120FN EAN: 8421152137109

FEATURES

High spout kitchen tap
Minimalistic design
Swivel spout
Anti-scale aerator
Cartridge with ceramic discs of high resistance
Highly precise temperature control
Greater handling sensitivity with smoother movements
3/8" flexible inlet pipes

DIMENSIONS

Product height (mm): 341
Product width (mm):
Product depth (mm):
Product length (mm):
Net weight (Kg): 1,55

COLOURS

53995120FN	Black
5399512	White
5399512	Grey
5399512	Carbon
5399512	Sandbeige
5399512	Metallic black
5399512	Chrome