MaestroPizza HLB 85-G1 P BM
Infinity G1 MaestroPizza oven. Special edition by Italdesign Giugiaro

70L | HydroClean steam cleaning system | SoftClose

REFERENCE

REF: 111000056 EAN: 8434778022353

FEATURES

Infinity G1 special edition
Designed in Italy by Italdesign Giugiaro
Multifunction SurroundTemp oven
Exclusive matte black finishing
8 cooking functions
Pyrolysis self-cleaning system and automatic HydroClean system
Touch control display with knobs
Electronic timer (Delay/Start function)
Chrome supports with 5 cooking levels
Removable quadruple glazed door
Automatic disconnection security system
SoftClose system
Children safety lock
Manual quick preheating
Anti-tip deep tray, baking tray and reinforced grid
Special pizza stone included
Capacity (gross/net): 71 /70 litres

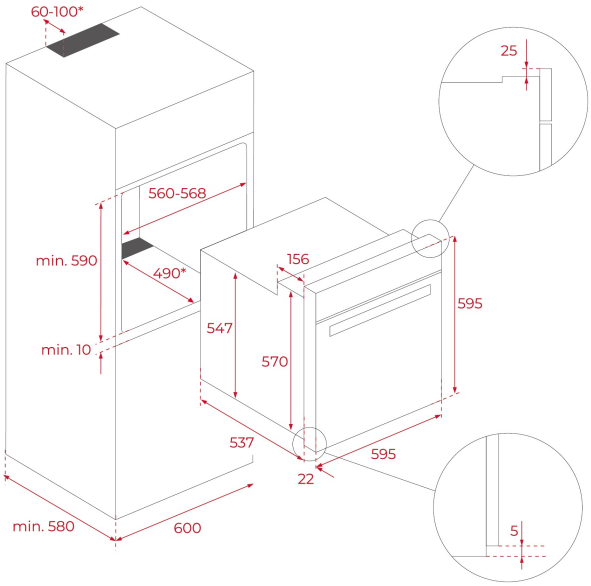

DIMENSIONS

Product height (mm): 595
Product width (mm): 595
Product depth (mm): 537+22
Product length (mm):
Net weight (Kg): 42

TECHNICAL DETAILS

Energy Efficiency Class: A+
Power rate (V): 220/240
Frequency (Hz): 50/60
Maximum Nominal Power (W): 3552

COLOURS

111000056 Black matt