# GBC 64-G1 MB

Infinity G1 Gas on Glass hob. Special edition by Italdesign Giugiaro




Auto ignition


Autolock


Easy installation

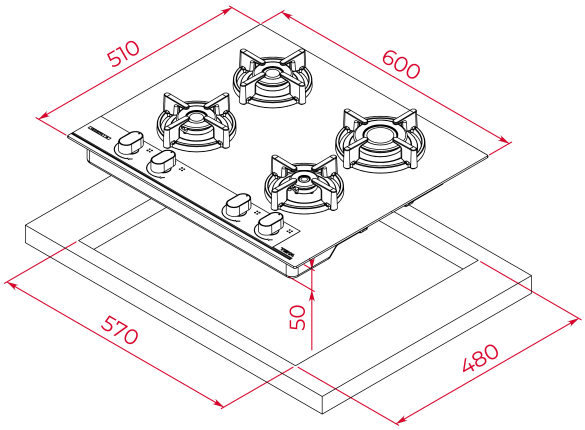


## REFERENCE

**REF:** 112570208 **EAN:** 8434778022599

## FEATURES

Designed in Italy by Italdesign Giugiaro
Gas on Glass hob
Exclusive matte black finishing
Frontal mechanical control panel with ergonomic design
4 cooking zones
1 fast burner, 2,80 kW
1 semi fast burner, 1,75 kW
1 semi fast burner, 1,40 kW
1 auxiliary burner, 1,00 kW
Ceramic glass surface
Auto ignition
Auto-lock safety system
Cast iron grids
Easy installation kit
Maximum nominal power 6950 W

## DIMENSIONS

**Product height (mm):** 98
**Product width (mm):** 600
**Product depth (mm):** 510
**Product length (mm):**
**Net weight (Kg):** 13,4

## TECHNICAL DETAILS

Power rate (V): 220-240
Frequency (Hz): 50/60
Maximum Nominal Power (W): -

## COLOURS

112570208 Black matt

## ENERGY EFFICIENCY

Power consumption in standby mode (W): -
Time to reach standby mode (min): -