DFI 76960
Fully integrated dishwasher with SlidingDoor system, silver ion filter and beam on floor

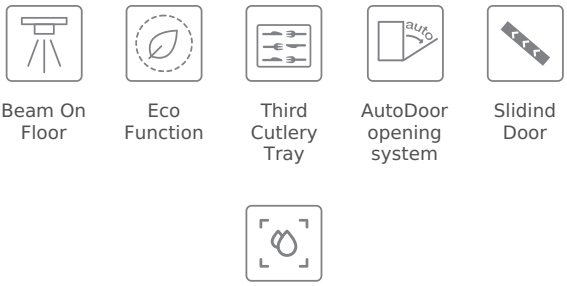

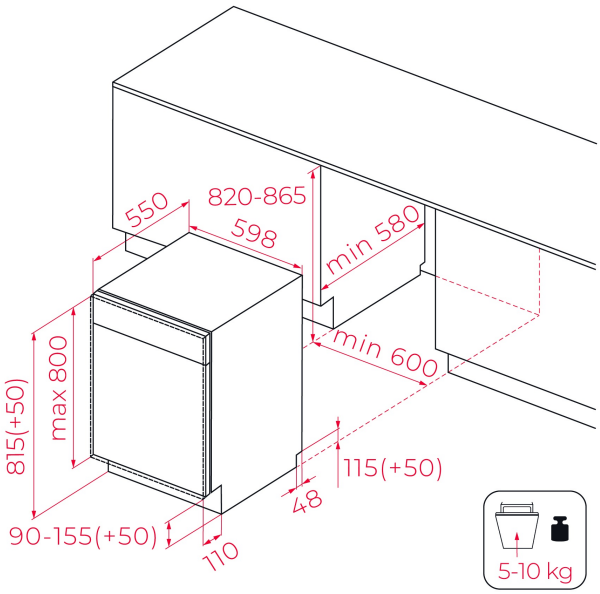

REFERENCE

REF: 114260027 EAN: 8434778032758

FEATURES

Fully integrated dishwasher
Electronic control panel with white display
Capacity: 14 plate settings
Washing programs: 8
Washing temperatures: 45º, 50º, 55º, 60º, 65ºC
PremiumDry automatic opening system
Special programs: Fast: 30 minutes, GlassCare, Intensive, ECO, 1-Hour,
Special functions: Express, PowerWash, ExtraDry
AquaStop and AquaSafe safety system
Low salt and rinse indicator
Third sprayer
Delay timer: 1-24 hours
Noise level: 42 dBA
Adjustable back feet from front
Sliding Detergent drawer

DIMENSIONS

Product height (mm): 815
Product width (mm): 598
Product depth (mm): 550
Product length (mm):
Net weight (Kg): 33,00

TECHNICAL DETAILS

Energy Efficiency Class: A+++
Energy Consumption (Kw/day): -
Water consumption (litres/year): 2744
Noise Level (dBA): 42
Power rate (V): 220-240 V
Frequency (Hz): 50Hz

COLOURS