DVF 97670 TBS BK 90cm Vertical decorative Hood with Fresh air function

LED | Perimeter extraction | Stop Delay Timer | Fresh AIR

DESCRIPTION	90cm Vertical decorative Hood with Fresh air function
LIFE STYLE	Maestro
COLOURS	
REFERENCE	REF. 112930017 EAN. 8434778010718

DVF 97670 TBS BK

FEATURES

Urban Colors Edition
Decorative vertical hood
Touch control
FreshAir function
Brushless EcoPower Motor
3 speeds + 1 intensive
Intensive speed exhaust capacity (m3/h): 740
Max speed exhaust capacity (m3/h): 400
Min speed exhaust capacity (m3/h): 270
Intensive speed sound level (dBA): 59
Max speed sound level (dBA): 48
Min speed sound level (dBA): 42
2 LED lamps
2 Aluminum Filters
Stop delay timer
Filer saturation indicator
Outlet reduction included
Optional recirculation kit with tube cover installation: SET D11CTP
Optional regenerative recirculation kit with tube cover installation:Set D12CTP
Optional Charcoal Filter: D11C
Optional Regenerative filter: D12C

DVF 97670 TBS BK

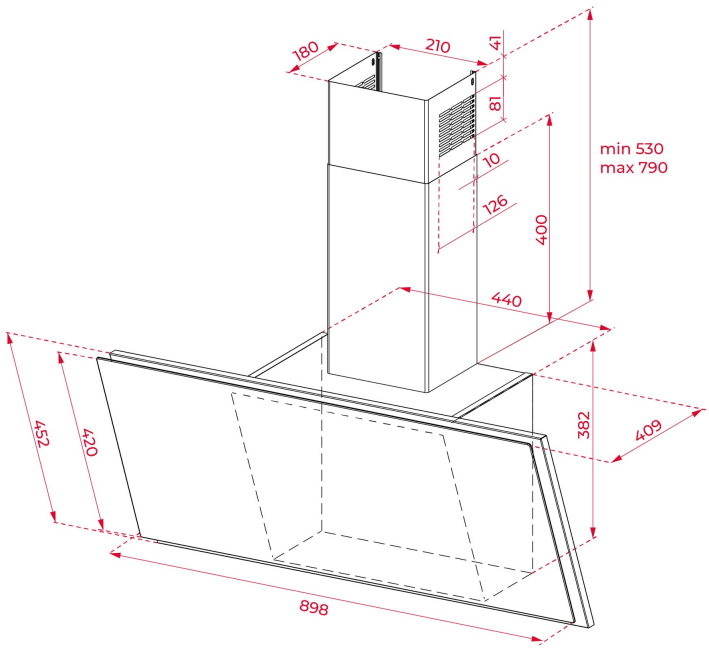

DIMENSIONS

Product height (mm): 912-1172
Product width (mm): 898
Product depth (mm): 409
Product length (mm):
Net weight (Kg): 12,9

TECHNICAL DETAILS

FEATURES

Certificates: CE; CB; EMC
Ø Outlet (mm): 150
Dual Aspiration System: Yes
Type of inner light: LED
Inside light Consumption (W): 1
Plug type: EU, safety class 1
Cable Connection Length (cm): 120 cm
Power rate (V): 220-240
Frequency (Hz): 50/60
Total hood power (W): 272
Number of motors: 1
Motor power (W): 270
Air flow (Qmin) m3/h: 260
Air flow (Qmax): 400
Air flow (Qboost): 720

ACCESSORIES

Outlet reduction: Yes
Outlet extension: no
Optional Charcoal Filter: D11C
Regenerative charcoal filter: D12C

Conventional recirculation kit (opt) - w/tube cover: SET D11CTP
Conventional recirculation kit (opt) - w/o tube cover: Set D12CTP

MODELS

Number of filters: 2
Filter description: Aluminum Filters
Opening system: Piston
Control panel: Touch Control
Stop delay timer: Yes
Filter saturation indicator: Yes
Number of speeds: 3+1
Fresh air function: Yes

DVF 97670 TBS BK
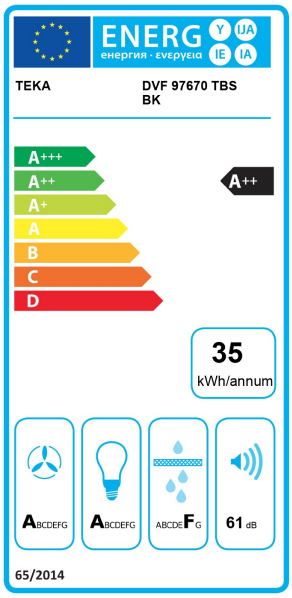
ENERGY LABEL