DVN 77050 TTC WH Vertical Decorative Hood with touch control and RIM Extraction 70 cm

LED

Stop Delay Timer

DESCRIPTION	Vertical Decorative Hood with touch control and RIM Extraction 70 cm
LIFE STYLE	Easy
COLOURS	
REFERENCE	REF. 112950014 EAN. 8434778017601

DVN 77050 TTC WH

FEATURES

Urban Colors Edition
Decorative vertical hood
Touch control
Rim extraction
3 speeds + 1 intensive
Free Outlet exhaust capacity (m3/h):704
Intensive speed exhaust capacity (m3/h): 640
Max speed exhaust capacity (m3/h): 485
Min speed exhaust capacity (m3/h): 260
Intensive speed sound level (dBA): 71
Max speed sound level (dBA): 64
Min speed sound level (dBA): 54
2 LED lamps
1 Aluminum Filter
Stop delay timer
Filer saturation indicator
Operating pilot light
Anti-return valve included
Outlet reduction included
Optional recirculation kit with tube cover installation: SET D13CTP
Optional Charcoal Filter: D9C

DVN 77050 TTC WH

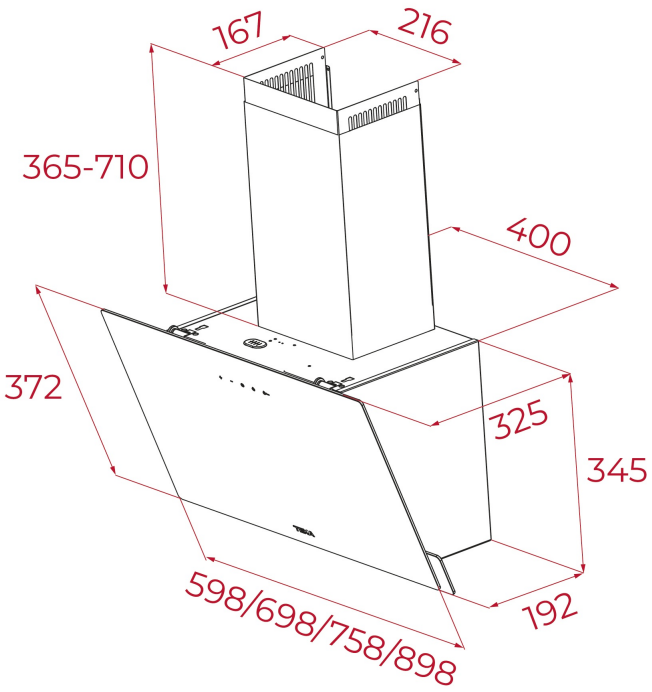

DIMENSIONS

Product height (mm): 690-1035
Product width (mm): 698
Product depth (mm): 325
Product length (mm):
Net weight (Kg): 11,2

TECHNICAL DETAILS

FEATURES

Ø Outlet (mm): 150
Type of inner light: LED
Inside light Consumption (W): 2x1,5
Plug type: schuko
Cable Connection Length (cm): 150
Power rate (V): 220-240
Frequency (Hz): 50/60
Total hood power (W): 233
Number of motors: 1
Motor power (W): 230
Air flow (Qmin) m3/h: 260
Air flow (Qmax): 485
Air flow (Qboost): 640

ACCESSORIES

Anti Return valve: Yes
Outlet extension: no
Optional Charcoal Filter: D9C
Conventional recirculation kit (opt) - w/tube cover: SET D13CTP

MODELS	**Number of filters:** 1 **Filter description:** Aluminum Filters **Opening system:** Panel Uphold Hinge **Control panel:** Touch Control **Stop delay timer:** Yes **Filter saturation indicator:** Yes **Number of speeds:** 3+1

DVN 77050 TTC WH
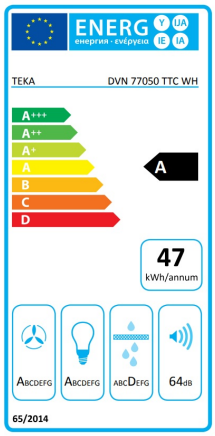
ENERGY LABEL