TK5 1480 WD UAE Free standing Washer Dryer with 15 programs, 8kg washing capacity and 5kg drying capacity

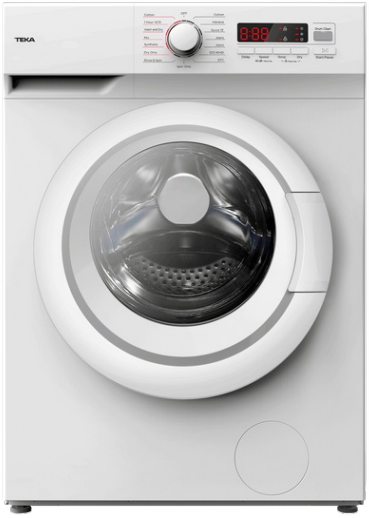

Quick Cycle

Washing capacity: 8Kg

DESCRIPTION	Free standing Washer Dryer with 15 programs, 8kg washing capacity and 5kg drying capacity
LIFE STYLE	Maestro
COLOURS	
REFERENCE	REF. 113960005 EAN. 8434778017946

TK5 1480 WD UAE

FEATURES

Free standing Washer-Dryer
Electronic control panel with display
Washing capacity: 9 kg
Drying capacity: 6 kg
Washing programs: 11
Drying programs: 4
Fast program: 15 minutes
Special programs: ECO mode, Wool care, Delicate, AllergySafe, Quick Wash & Dry, Gentle Dry
Special functions: Delay timer, Anti-allergies, Extra rinse, Stain type
Condenser heat pump
Maximum spinning speed: 1400 RPM
Automatic water regulation
Automatic door lock safety system
Child lock
Balance control system
SoftCare drum
Delay timer: 1-24 hours
33 cm wide porthole door

TK5 1480 WD UAE

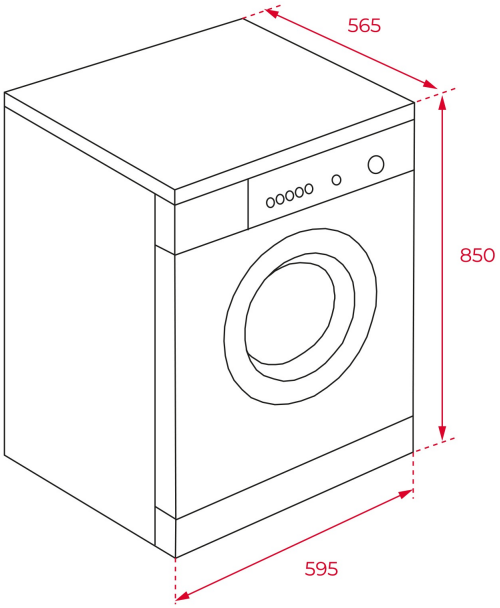

DIMENSIONS

Product height (mm): 850
Product width (mm): 600
Product depth (mm): 570
Product length (mm):
Net weight (Kg): 74

TECHNICAL DETAILS

PRODUCT SHEET

Type of installation: Free standing
Drying capacity (Kgs): 5
Energy consumption (kWh/year): 258
Water consumption (litres/year): 12800
Certificates: CE

POWER SUPPLY

Frequency (Hz): 50
Power rate (V): 220-240
Plug type: UK
Cable Connection Length (cm): 1,5
Maximum Nominal Power (W): 2050
Nominal power motor (W): 1350
Power of heating element (W): 2050
Water outlet hose length (m): 1.6
Water inlet hose length (m): 1

FEATURES

Stainless Steel Drum: Yes
Glass door diameter (cms): 48
Double water inlet (warm-cold): Yes

Number of programs: 9
Number Of Washing Temperatures: 0-20-30-40-60-90
Control panel: ELECTRONIC LED WHITE DISPLAY
Child lock: Yes
Auto lock door: Yes
Cancel spin cycle button: Yes

CONTROL INDICATOR LIGHTS

Selected program indicator: Yes
Remaining time: Yes
Drying: Yes
Dryer timer: Yes

SPECIAL FUNCTIONS

Fast program: Yes
Fast program (minutes): 15
Economic program: Yes
Intense program: Yes
Delayed Timer (h): 1-24
Delicate fabrics: Yes
Easy ironing/anti crease: Yes

EQUIPMENT

Adjustable Feet Back: Yes
Adjustable feet front: Yes