IZS 67620 MST 60 cm induction Flex hob with SlideCooking function and 3 cooking zones

MultiSlider | Autolock | Power | Power Plus | Easy installation

DESCRIPTION	60 cm induction Flex hob with SlideCooking function and 3 cooking zones
LIFE STYLE	Maestro
COLOURS	
REFERENCE	REF. 112500021 EAN. 8434778011661

IZS 67620 MST

FEATURES

Urban Colors Edition
MasterSense Series
Flex Induction hob
SlideCooking function
Direct functions with temperature sensors: Confit, poach, grilling, pan frying, deep frying, simmering and keep warm
Touch Control MultiSlider
3 cooking zones
2 zones Ø 228 x 200 mm
1 zone Ø 280/150 mm
Ceramic glass surface
Auto-lock safety system
Cooking timer
Power plus
Child lock
Residual heat indicator
Power management
Easy installation kit
Maximum nominal power 7200 W
Optional: Grilling plate
Optional: Teppanyaki

IZS 67620 MST

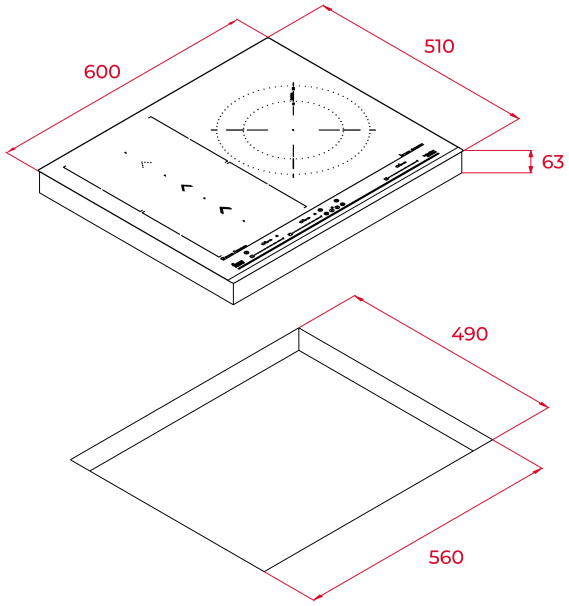

DIMENSIONS

Product height (mm): 53
Product width (mm): 600
Product depth (mm): 510
Product length (mm):
Net weight (Kg): 9,42

TECHNICAL DETAILS

FITTING MEASURES	**Built-in Width (mm):** 560 **Built-in Depth (mm):** 490 **Built-in height (mm):** 49
FEATURES	**Number of electric power levels:** 9 **Grilling:** Yes **Pan frying:** Yes **Deep frying:** Yes **Simmering:** Yes **Melting:** Yes **Keeping warm:** Yes **Confit:** Yes **Poach:** Yes **Power management function:** Yes
ELECTRIC CONNECTION	**Frequency (Hz):** 50/60 **Power rate (V):** 220-240 **Cable Connection Length (cm):** 110 **Maximum Nominal Power (W) (Electric hob):** 7200

COOKING ZONES	**Cooking Zones:** 3
SAFETY SYSTEMS	**Residual heat indicator (Electric hob):** Yes **Automatic safety disconnection (Auto Lock) (Electric hob):** Yes **Child lock:** Yes
FINISH	**Surface finishing:** Front bevelled glass **Surface type:** Ceramic Glass (4mm) **Easy installation system:** Yes
ACCESSORIES	**Junction Kit:** Optional **Teppan Yaki:** Optional