DHT 97670 TOS WH Built-In ceiling hood in 214mm height with FreshAir function and Rim extraction

Remote Control | LED | Perimeter extraction | Stop Delay Timer | Fresh AIR

DESCRIPTION	Built-In ceiling hood in 214mm height with FreshAir function and Rim extraction
LIFE STYLE	Maestro
COLOURS	
REFERENCE	REF. 113100004 EAN. 8434778019322

DHT 97670 TOS WH

FEATURES

Ceiling hood
Electronic control
FreshAir function
Rim extraction
Remote control
Brushless EcoPower Motor
4 speeds + 2 intensive
Free Outlet exhaust capacity (m3/h): 800
Max speed exhaust capacity (m3/h): 808
Min speed exhaust capacity (m3/h): 315
Intensive speed exhaust capacity (m3/h): 686
Intensive speed sound level (dBA): 70
Max speed sound level (dBA): 67
Min speed sound level (dBA): 50
3 LED lamps
Light intensity regulation
2 Aluminum filter
Stop delay timer
Filter saturation indicator
Operating pilot light
Outlet reduction optional
Optional Charcoal Filter: R1RES

DHT 97670 TOS WH

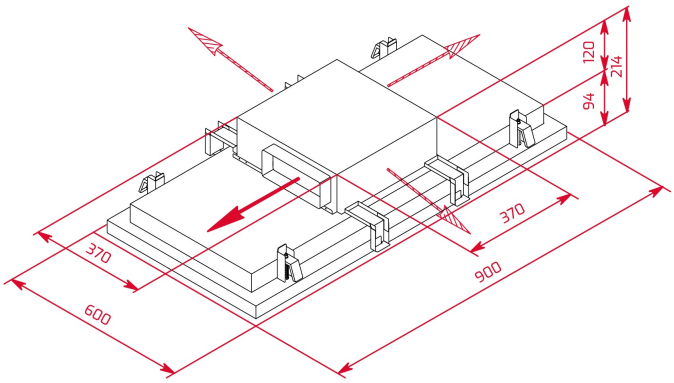

DIMENSIONS

Product height (mm): 214
Product width (mm): 900
Product depth (mm): 600
Product length (mm):
Net weight (Kg): 25

TECHNICAL DETAILS

FEATURES

Ø Outlet (mm): 215x85
Type of inner light: LED
Inside light Consumption (W): 2,2
Plug type: Schuko
Cable Connection Length (cm): 150
Power rate (V): 220-240
Frequency (Hz): 50-60
Total hood power (W): 226,6
Number of motors: 1
Motor power (W): 220
Air flow (Qmin) m3/h: 317
Air flow (Qmax): 634
Air flow (Qboost): 808

ACCESSORIES

Outlet reduction: Yes
Regenerative charcoal filter: Yes
Regenerative recirculation kit (opt) - w/o tube cover: SET RFC 60210 O1B

MODELS

Number of filters: 2
Filter description: Aluminum
Opening system: Piston
Control panel: Remote Control
Remote control: Yes
Stop delay timer: Yes
Filter saturation indicator: Yes
Number of speeds: 4+2
Fresh air function: Yes

DHT 97670 TOS WH
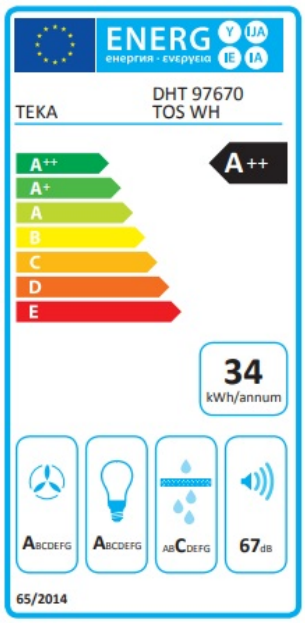
ENERGY LABEL