HSB 630 P 60cm Multifunction Oven and DualClean system

70L

DualClean

Plus Extension Telescopic Guide

HydroClean

Pyrolysis

DESCRIPTION	60cm Multifunction Oven and DualClean system
LIFE STYLE	Total
COLOURS	
REFERENCE	REF. 41566051 EAN. 8421152148877

HSB 630 P

FEATURES

Multifunction oven
8 cooking functions
Pyrolysis self-cleaning system and automatic HydroClean system
Mechanical control knobs
Electronic timer
Chrome supports with 5 cooking levels
Easy slide telescopic guides
Removable quadruple glazed door
Children safety lock
Automatic disconnection safety system
Manual quick preheating
Anti-tip deep tray
Capacity (gross/net): 71 / 70 litres

HSB 630 P

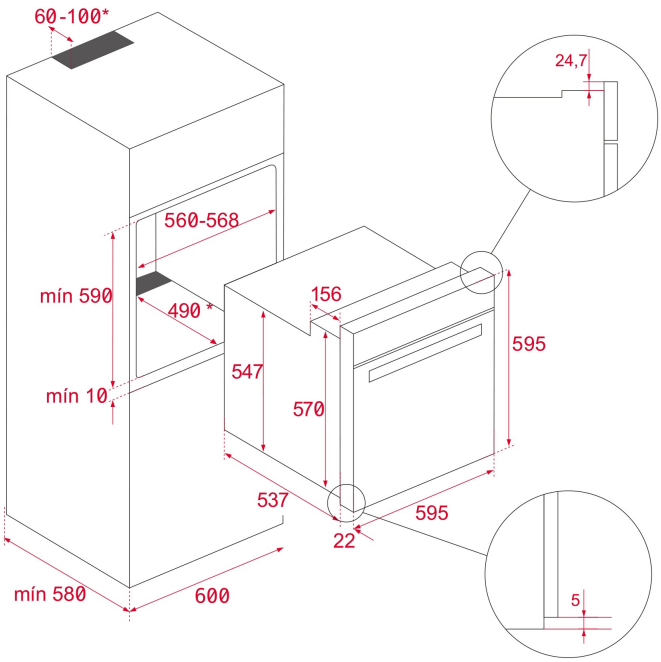

DIMENSIONS

Product height (mm): 595
Product width (mm): 595
Product depth (mm): 537+22
Product length (mm):
Net weight (Kg): 34

TECHNICAL DETAILS

FEATURES

Certificates: N / CE / CCA / CB
Number of cavities: 1
Type of inner light: Halogen
Inside light position: RIGHT TOP CORNER
Enamelled cavity: Yes
Min. Temperature Regulator (ºC): 50
Max. Temperature Regulator (ºC): 250
Function selector: 11+0
Number of cooking functions: 8
Top + Bottom function: Yes
Grill function: Yes
MaxiGrill function: Yes
Top + Bottom + Fan function: Yes
MaxiGrill + Fan function: Yes
Bottom function: Yes
ECO function: Yes
Mechanical quick heating: Yes
Touch Control Programmer: Yes
Knobs type: MMX FIX knurling
Removable chromed tray guides: Yes
Number of guide levels: 5
Easy slide telescopic guides: Yes

ELECTRIC CONNECTION

Maximum Nominal Power (W): 3552
Frequency (Hz): 50/60
Power rate (V): 220-240
Cable Connection Length (cm): 110
Inside light Consumption (W): 25

ENERGY CONSUMPTION

Energy consumption per cycle in conventional mode (kWh): 0.88
Energy consumption per cycle in fan-forced convection mode (kWh): 0,68
Bottom Heating Element (W): 1050
Grill (W): 1400
Maxi Grill (W): 2450
Traditional (W): 2450
Multifunction Turbo (W): 25
Cooling Fan Motor (W): 30

SAFETY SYSTEMS

Automatic disconnection when opening the door: Yes
Panel blocking system: Yes
Children safety block option: Yes
Grill protection: Yes
Anti-tip tray system: Yes
Safety Thermostat: Yes

CLEANING SYSTEM

Crystal Clean Enamel (Slippery): Yes
Hydroclean PRO: Yes
Pyrolytic: Yes
DualClean: Yes

ACCESSORIES

Deep Tray (50 mm): 1
Standard grid: 1

ENERGY EFFICIENCY

Energy Efficiency Class: A+
Energy Efficiency Index (EEI): 81

HSB 630 P
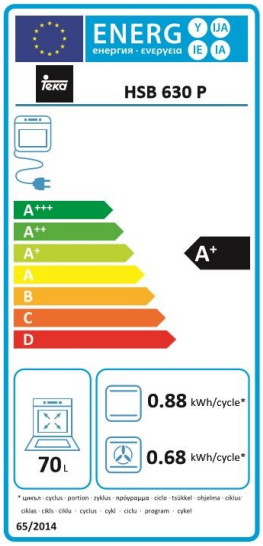
ENERGY LABEL