ML 820 BI 20L Built-in Mechanical Microwave

Defrost By
Time

DESCRIPTION	20L Built-in Mechanical Microwave
LIFE STYLE	Maestro
COLOURS	
REFERENCE	REF. 40584201 EAN. 8421152145562

ML 820 BI

FEATURES

Built-in Microwave
1 cooking function
5 power levels, 1200 W
Defrost by time
Mechanical control knobs
Double glazed door with right opening
Automatic disconnection when open door
Capacity (gross/net): 18 / 20 litres
Stainless steel cavity

ML 820 BI

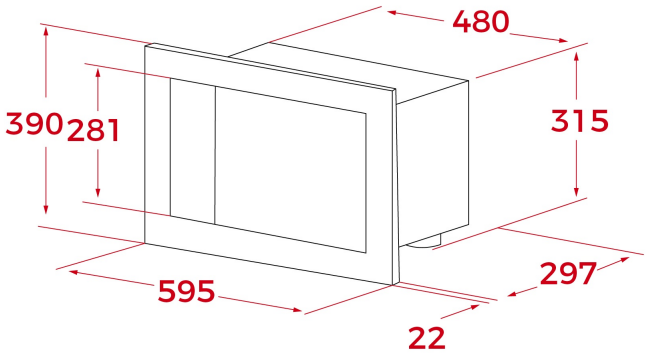

DIMENSIONS

Product height (mm): 390
Product width (mm): 595
Product depth (mm): 325
Product length (mm):
Net weight (Kg): 17,5

TECHNICAL DETAILS

FEATURES	**Certificates:** CE/CB **Number of cavities:** 1 **Number of cooking functions:** 1 **Number of guide levels (lower cavity):** 0 **Microwave function:** Yes **Number of power levels:** 5
ELECTRIC CONNECTION	**Maximum Nominal Power (W):** 1200 **Frequency (Hz):** 50 **Power rate (V):** 220 - 240 **Cable Connection Length (cm):** 110 **Plug:** Yes
SAFETY SYSTEMS	**Automatic disconnection when opening the door:** Yes **Safety Thermostat:** Yes
ACCESSORIES	**Glass Tray:** 0