BE 40.40 1B Undermount stainless steel sink with one bowl

Antibacterial

Lifetime warranty

DESCRIPTION	Undermount stainless steel sink with one bowl
LIFE STYLE	Total
COLOURS	
REFERENCE	REF. 10125005 EAN. 8421152024119

BE 40.40 1B

FEATURES

Stainless steel sink
One bowl
Undermount installation
3½" manual basket waste with overflow
180 mm deep bowl
50 cm base unit

BE 40.40 1B

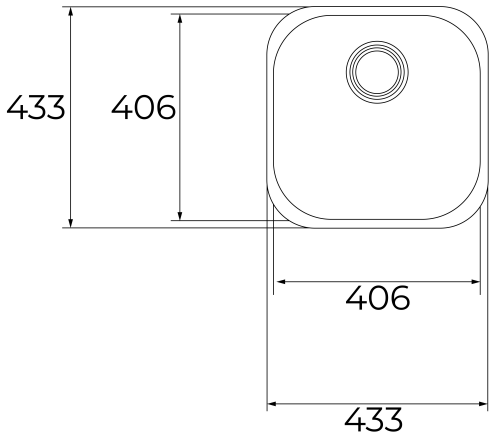

DIMENSIONS

Product height (mm):
Product width (mm): 435
Product depth (mm): 180
Product length (mm): 435
Net weight (Kg): 2,08

TECHNICAL DETAILS

MAIN BOWL	**Main Bowl Length (mm):** 406 **Main Bowl Width (mm):** 406 **Main Bowl Depth (mm):** 180
OTHER FEATURES	**Material:** Stainless Steel **Type of installation:** Undermount **Valve hole type:** 3½" **Overflow hole:** Round **Sink Bowl / Top thickness (mm):** 0,8
OTHERS	**Base unit (cm):** 50
SINK LAY OUT	**Number of bowls:** 1 **Number of drainers:** 0
ACCESSORIES	**Soundproof:** Yes

Installation clips: Yes