Duetta 1B 1D Inset stainless steel sink with one bowl and one drainer

Antibacterial

Lifetime warranty

DESCRIPTION	Inset stainless steel sink with one bowl and one drainer
LIFE STYLE	Total
COLOURS	
REFERENCE	REF. 10109006 EAN. 8421152034064

Duetta 1B 1D

FEATURES

Sphera Series
Stainless steel sink
One bowl and one drainer
Inset installation
3½" manual basket waste
150 mm deep bowl
60 cm base unit

Duetta 1B 1D

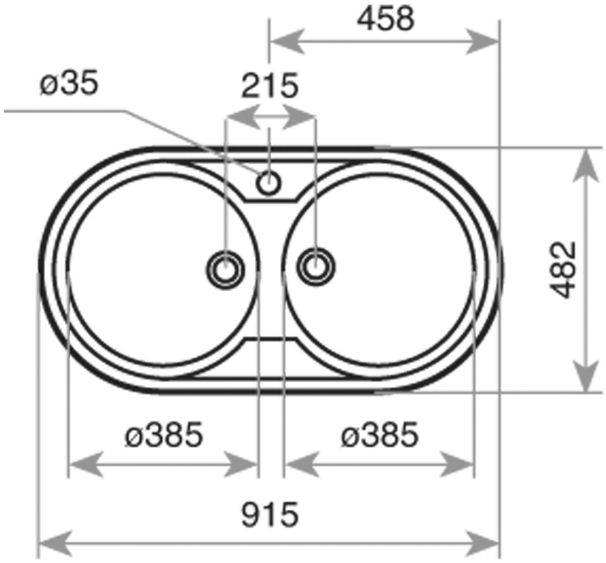

DIMENSIONS

Product height (mm):
Product width (mm): 482
Product depth (mm): 150
Product length (mm): 915
Net weight (Kg): 3,76

TECHNICAL DETAILS

MAIN BOWL	**Main Bowl Length (mm):** Ø385 **Main Bowl Width (mm):** Ø385 **Main Bowl Depth (mm):** 150
OTHER FEATURES	**Material:** Stainless Steel **Type of installation:** Inset **Valve hole type:** 3½" **Overflow hole:** No **Sink Bowl / Top thickness (mm):** 1,0
OTHERS	**Base unit (cm):** 60
SINK LAY OUT	**Number of bowls:** 1 **Number of drainers:** 1 **Drainer position:** Reversible

ACCESSORIES	**Soundproof:** Yes **Installation clips:** Yes