# **Diamond RS15 2B 1D** Inset glass sink with two bowls and one drainer

200mm depth | Antibacterial | Lifetime warranty + SilentSmart | R15, easy to clean

| | |
|---|---|
| **DESCRIPTION** | Inset glass sink with two bowls and one drainer |
| **LIFE STYLE** | Maestro |
| **COLOURS** | |
| **REFERENCE** | REF. 115160007<br>EAN. 8434778004809 |

# Diamond RS15 2B 1D

**FEATURES**

Diamond Series
Stainless steel and glass sink
Two inox bowls and one drainer
Safety tempered glass with bevelled edges
Inset installation
Easy clean radius R15 corners
3½" SQ automatic basket waste with siphon
Decorative SQ cover
SilentSmart, 50% less noise
200 mm deep bowls
80 cm base unit

# Diamond RS15 2B 1D

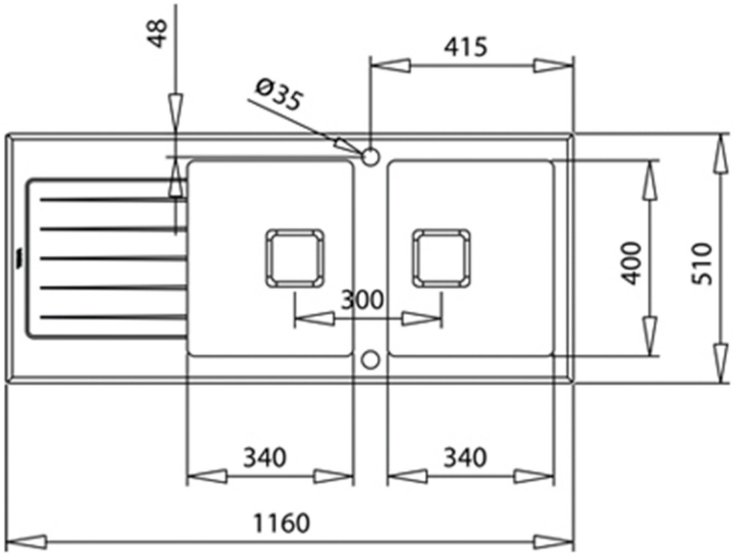


## DIMENSIONS

**Product height (mm):**
**Product width (mm):** 510
**Product depth (mm):** 200
**Product length (mm):** 1160
**Net weight (Kg):** 4,6

## TECHNICAL DETAILS

| | |
|---|---|
| **MAIN BOWL** | **Main Bowl Length (mm):** 340<br>**Main Bowl Width (mm):** 400<br>**Main Bowl Depth (mm):** 200 |
| **OTHER FEATURES** | **Material:** Stainless Steel and Glass<br>**Type of installation:** Inset<br>**Number of tap holes:** 2<br>**Valve hole type:** 3½" SQUARED<br>**Overflow hole:** Rectangular<br>**Sink Bowl / Top thickness (mm):** 1,0 / 8,0 |
| **OTHERS** | **Base unit (cm):** 80 |
| **SECONDARY BOWL** | **Secondary Bowl Length (mm):** 340<br>**Secondary Bowl Width (mm):** 400<br>**Secondary Bowl Depth (mm):** 200 |

| | |
|---|---|
| **SINK LAY OUT** | **Number of bowls:** 2<br>**Number of drainers:** 1<br>**Drainer position:** Reversible |
| **ACCESSORIES** | **Soundproof:** Yes<br>**SilentSmart:** Yes<br>**Siphon:** Yes |