DVI 88-G1 EOS BM Infinity G1 vertical hood. Special edition by Italdesign Giugiaro

LED | Perimeter extraction | Stop Delay Timer | Fresh AIR

DESCRIPTION	Infinity G1 vertical hood. Special edition by Italdesign Giugiaro
LIFE STYLE	Maestro
COLOURS	
REFERENCE	REF. 112930056 EAN. 8434778022018

DVI 88-G1 EOS BM

FEATURES

Infinity G1 special edition
Designed in Italy by Italdesign Giugiaro
Decorative vertical hood
Exclusive matte black finishing
Push buttons control
FreshAir function
Rim extraction
Brushless EcoPower Motor
3 speeds + 1 intensive
Free Outlet exhaust capacity (m3/h): 786
Max speed exhaust capacity (m3/h): 800
2 LED lamps
1 aluminium filters with 3 layers
Stop delay timer
Filter saturation indicator
Anti-return valve included
Outlet reduction included
Optional recirculation kit with tube cover installation:CFH 15200 L3C
Optional regenerative recirculation kit with tube cover installation: RFH 15200 L3C
Optional recirculation kit without tube cover installation: CFH 15200 O2C
Optional regenerative recirculation kit without tube cover installation: RFH 15200 O2C
Optional Charcoal Filter: 113290015
Optional Regenerative filter: R1RTK

DVI 88-G1 EOS BM

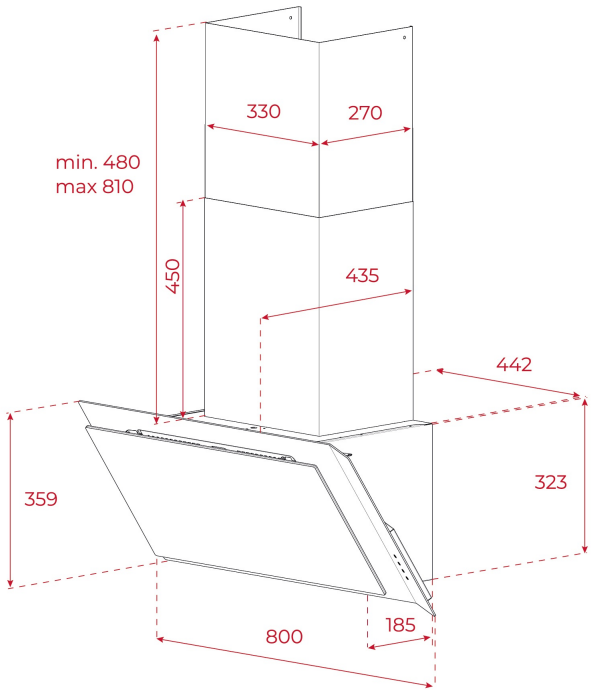

DIMENSIONS

Product height (mm): 810-1140
Product width (mm): 800
Product depth (mm): 409
Product length (mm):
Net weight (Kg): 17,5

TECHNICAL DETAILS

FEATURES

Ø Outlet (mm): 150
Removable oil collector: Yes
Dual Aspiration System: Yes
Type of inner light: LED
Inside light Consumption (W): 4
Plug type: Schuko plug
Cable Connection Length (cm): 100
Power rate (V): 220-240
Frequency (Hz): 50/60
Total hood power (W): 278
Number of motors: 1
Motor power (W): 270
Air flow (Qmin) m3/h: 232
Air flow (Qmax): 411
Air flow (Qboost): 726

ACCESSORIES

Anti Return valve: Yes
Outlet reduction: Yes
Outlet extension: No
Optional Charcoal Filter: C1RTK

Regenerative charcoal filter: R1RTK
Conventional recirculation kit (opt) - w/tube cover: CG1 15200 L3C
Regenerative recirculation kit (opt) - w/tube cover: RG1 15200 L3C
Conventional recirculation kit (opt) - w/o tube cover: CG1 15200 O2C
Regenerative recirculation kit (opt) - w/o tube cover: RG1 15200 O2C

MODELS

Number of filters: 1
Filter description: Black Design Aluminum Filters
Opening system: Piston
Control panel: Electronic soft bottons
Stop delay timer: Yes
Filter saturation indicator: Yes
Number of speeds: 3 + 1
Fresh air function: Yes

DVI 88-G1 EOS BM
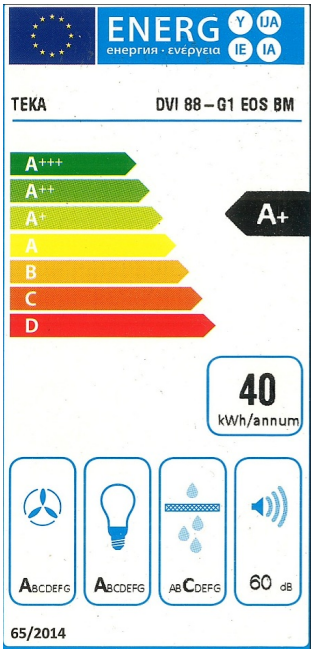
ENERGY LABEL