TOTAL **HSF 824 G**

Multifunction Oven with 5 cooking functions

REFERENCE

REF: 41596007 EAN: 8421152155240

FEATURES

Multifunction oven
Gas oven with gas grill
5 cooking functions
Mechanical control knobs
Mechanical timer
Chrome supports with 5 cooking levels
Removable double glazed door
Manual quick preheating
Anti-tip deep tray and reinforced grid
Capacity (gross/net): 88 / 69 litres

69L

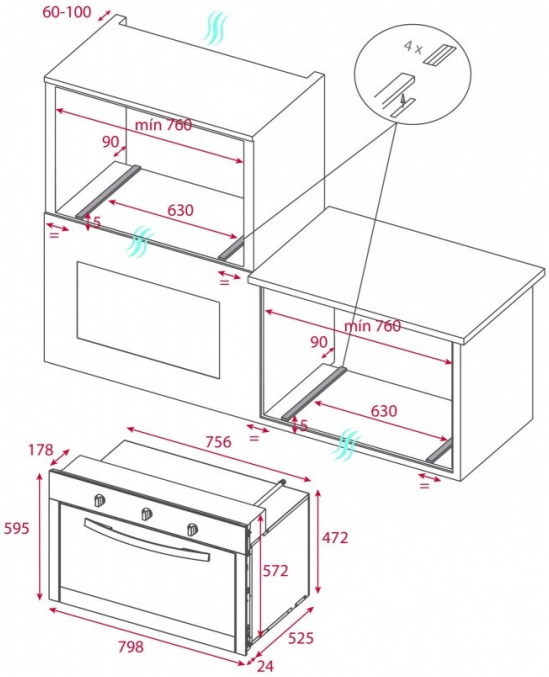

DIMENSIONS

Product height (mm): 595
Product width (mm): 798
Product depth (mm): 525
Product length (mm):
Net weight (Kg): 40

TECHNICAL DETAILS

Energy Efficiency Class: B
Power rate (V): 127
Frequency (Hz): 50/60
Maximum Nominal Power (W): 1.998

COLOURS

41596007 Stainless Steel