RFD 77820 GBK EU
Full No Frost French Door refrigerator with inverter motor and antibacterial system

Motor Inverter | On Holidays function | Gourmet Box | IonClean Technology | LED

LongLife No Frost | Vitacare Box

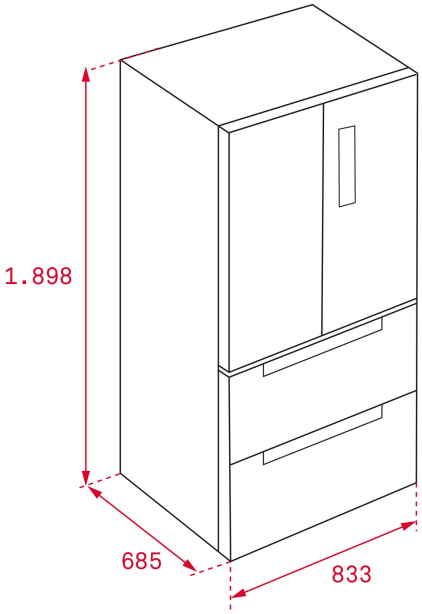

REFERENCE

REF: 113430004 EAN: 8434778001471

FEATURES

Urban Colors Edition
Free Standing french door refigerator
LongLife No Frost with 3 independent circuits
IonClean technology
Inverter motor
Outer control display
Electronic adjustable thermostat
Gourmet box + 2 VitaCare Box drawers
Safety glass shelves
On holidays function
Fast freezing and fast cooling function
Front adjustable feet
LED Illumination
Climate class: SN/N/ST/T
Total capacity (gross/net): 582 / 500 litres
Bottle rack and ice cube tray included

DIMENSIONS

Product height (mm): 1898
Product width (mm): 833
Product depth (mm): 685
Product length (mm):
Net weight (Kg): 136

TECHNICAL DETAILS

Energy efficiency class (UE 2019/2016): A++
Climate Class: N/T
Energy Consumption (Kw/day): 0,915
Annual Consumption (kWh/year): 333
Freezing Capacity: 13
Noise Level (dBA): 41
Power rate (V): 230
Frequency (Hz): 50

COLOURS

113430004 Black glass

113430005 Stainless steel