EASY **HCB 6535**

Multifunction Oven with HydrocleanPRO and Push-Pull Knobs

70L HydroClean

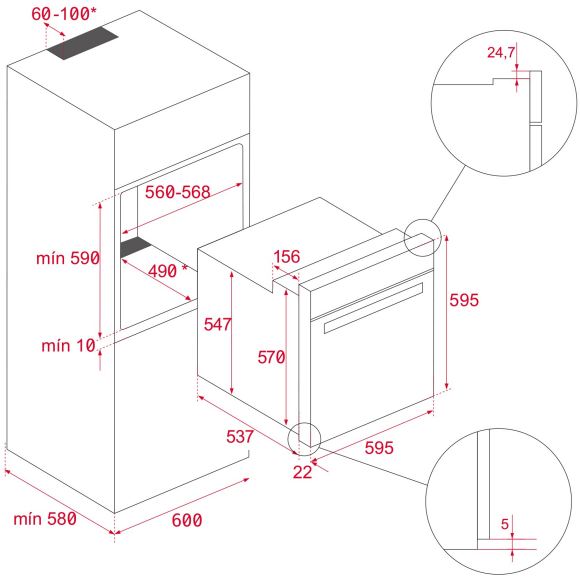

REFERENCE

REF: 111020030 EAN: 8434778012736

FEATURES

Multifunction oven
8 cooking functions
Automatic HydroClean system
Mechanical control knobs
Electronic timer
Removable double glazed door
Manual quick preheating
Anti-tip deep tray
Capacity (gross/net): 71 / 70 litres

DIMENSIONS

Product height (mm): 595
Product width (mm): 595
Product depth (mm): 537+22
Product length (mm):
Net weight (Kg): 27

TECHNICAL DETAILS

Energy Efficiency Class: A+
Power rate (V): 220-240
Frequency (Hz): 50/60
Maximum Nominal Power (W): 2615

COLOURS

111020030	Stainless Steel
111020031	White Glass
111020031	Black Glass