Nova 45 B-TG 1B 1D

Inset Nova Series sink with one bowl and one drainer

REFERENCE

REF: 115330058 EAN: 8434778023862

FEATURES

Nova Series
Tegranite+ sink
One bowl and one drainer
Inset installation
3½” automatic waste basket with siphon
HelixPro waste basket
200 mm deep bowl
45 cm base unit

200mm depth | Colour Intensity | Easy Clean | Food safe | High resistance

DIMENSIONS

Product height (mm):
Product width (mm): 510
Product depth (mm):
Product length (mm): 860
Net weight (Kg): 12,74

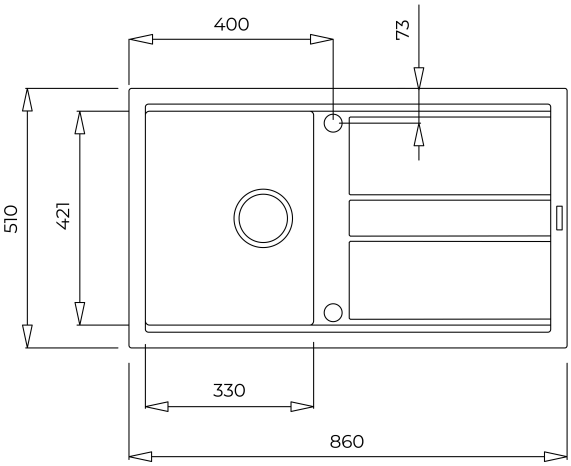

COLOURS

115330058 Artic white