# MWE 225 G WH

Free standing microwave with grill

Defrost By Time | Defrost By Weight | Direct Access Menu | 20L

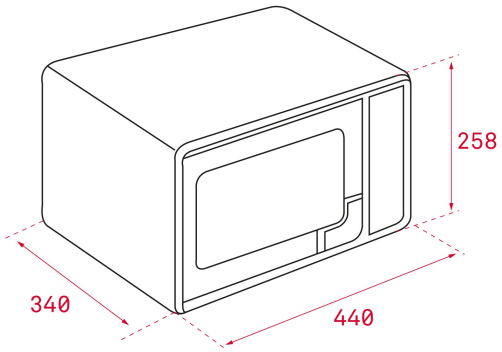


## REFERENCE

REF: 40590471 EAN: 8421152128749

## FEATURES

Free standing Microwave + grill
Stainless steel (fingerprint proof)
Electronic Control panel
Quartz Grill, 1.000 W
5 power levels, 800 W
Total gross capacity : 20 litres
Stainless Steel inner
Inner and outside gloss door
Minute minder: 0 - 95 minutes
Defrosting by weight and time
Time and electronic functions selector
8 direct access menu
+30'' function
Children safety block

## DIMENSIONS

**Product height (mm):** 258
**Product width (mm):** 440
**Product depth (mm):** 340
**Product length (mm):**
**Net weight (Kg):** 10,7

## TECHNICAL DETAILS

MWO Power (W): 700
Frequency (Hz): 50
Maximum Nominal Power (W): 1050
Grill (W): 1000

## COLOURS

| | |
|---|---|
| 40590471 | White |
| 40590470 | Stainless steel |