HLF 940 90cm Multifunction SurroundTemp Oven with 77L capacity

Full Extension Telescopic Guide | 77L | HydroClean | SurroundTemp

DESCRIPTION	90cm Multifunction SurroundTemp Oven with 77L capacity
LIFE STYLE	Maestro
COLOURS	
REFERENCE	REF. 41592223 EAN. 8421152155042

HLF 940

FEATURES

Multifunction SurroundTemp oven
9 cooking functions
Automatic HydroClean system
Mechanical control knobs
Electronic timer
Chrome supports with 5 cooking levels
Full extension telescopic guides
Removable triple glazed door
Children safety lock
Automatic disconnection safety system
Manual quick preheating
Anti-tip deep tray and reinforced grid
Capacity (gross/net): 91 / 77 litres

HLF 940

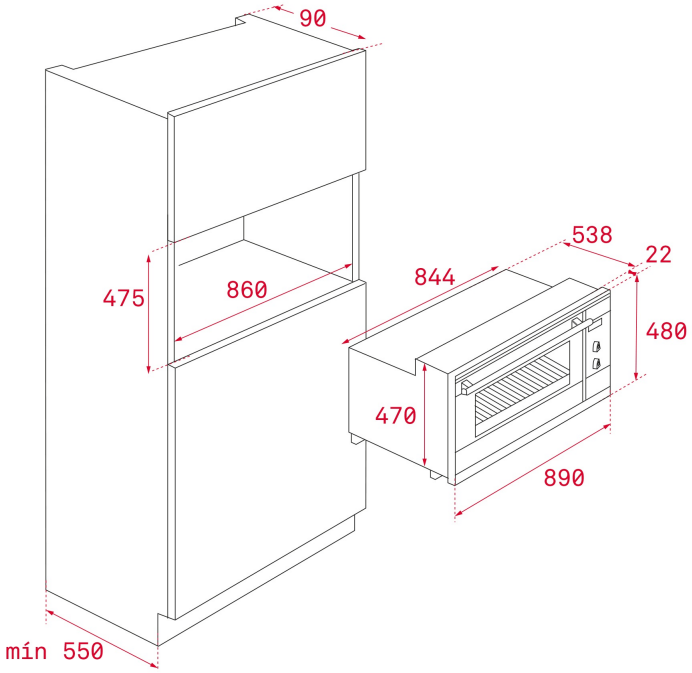

DIMENSIONS

Product height (mm): 480
Product width (mm): 890
Product depth (mm): 538+22
Product length (mm):
Net weight (Kg): 51

TECHNICAL DETAILS

FEATURES

Certificates: N / CE / CCA / CB /GMARK
Number of cavities: 1
Type of inner light: Halogen
Inside light position: SIDE
Enamelled cavity: Yes
Min. Temperature Regulator (ºC): 50
Max. Temperature Regulator (ºC): 250
Function selector: 10+0
Number of cooking functions: 9
Top + Bottom function: Yes
Grill + Bottom function: Yes
Grill function: Yes
MaxiGrill function: Yes
Top + Bottom + Fan function: Yes
Bottom function: Yes
Bottom + TURBO (Pizza) function: Yes
Turbo function: Yes
Touch Control Programmer: Yes
Knobs type: MMX FIX KNOB knurling
Removable chromed tray guides: Yes
Number of guide levels: 5
Full extension telescopic guides: Yes

Drop-down grill: Yes
Forced refrigeration tangential 1 speed: Yes

ELECTRIC CONNECTION

Maximum Nominal Power (W): 3551
Frequency (Hz): 50/60
Power rate (V): 220-240
Cable Connection Length (cm): 110
Inside light Consumption (W): 25

ENERGY CONSUMPTION

Energy consumption per cycle in conventional mode (kWh): 1.1
Energy consumption per cycle in fan-forced convection mode (kWh): 0,86
Bottom Heating Element (W): 1055
Grill (W): 1700
Maxi Grill (W): 2750
Traditional (W): 2105
Turbo (W): 2400
Multifunction Turbo (W): 30
Cooling Fan Motor (W): 18

SAFETY SYSTEMS

Automatic disconnection when opening the door: Yes
Panel blocking system: Yes
Children safety block option: Yes
Grill protection: Yes
Anti-tip tray system: Yes
Safety Thermostat: Yes

CLEANING SYSTEM

Crystal Clean Enamel (Slippery): Yes
Hydroclean PRO: Yes

ACCESSORIES

Baking Tray: 1
Deep Tray (50 mm): 1
Reinforced grid: 1

ENERGY EFFICIENCY

Energy Efficiency Class: A
Energy Efficiency Index (EEI): 98,9

HLF 940
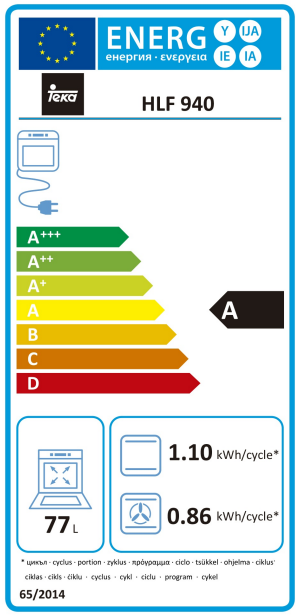
ENERGY LABEL