C 6310 60cm Classical integrated hood with 3 speeds and 1 motor

LED

DESCRIPTION	60cm Classical integrated hood with 3 speeds and 1 motor
LIFE STYLE	Easy
COLOURS	
REFERENCE	REF. 40461541 EAN. 8421152146064

C 6310

FEATURES

Classic hood
Touch slider control
3 speeds
Free Outlet exhaust capacity (m3/h): 254
Max speed exhaust capacity (m3/h): 235
Min speed exhaust capacity (m3/h): 124
Max speed sound level (dBA): 66
Min speed sound level (dBA): 49
2 LED lamps
2 aluminium filters
Operating pilot light
Anti-return valve included
Optional Charcoal Filter: C2R

C 6310

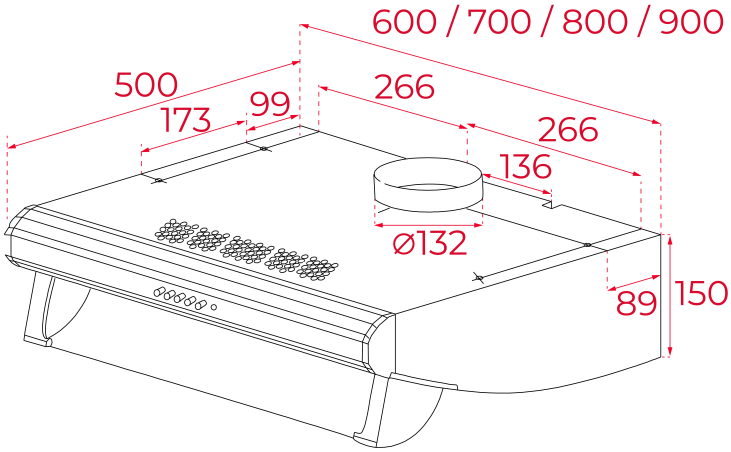

DIMENSIONS

Product height (mm): 150
Product width (mm): 600
Product depth (mm): 500
Product length (mm):
Net weight (Kg): 6,65

TECHNICAL DETAILS

FEATURES

Certificates: CE; CB; Rohs
Ø Outlet (mm): 120
Type of inner light: LED
Inside light Consumption (W): 6
Plug type: European plug
Power rate (V): 230
Frequency (Hz): 50
Total hood power (W): 120
Number of motors: 1
Motor power (W): 108
Air flow (Qmin) m3/h: 128
Air flow (Qmax): 218

ACCESSORIES

Anti Return valve: Yes
Outlet extension: Yes
Optional Charcoal Filter: C2R
Integration Frontal panel Code: No
Conventional recirculation kit (opt) - w/tube cover: No

MODELS	**Number of filters:** 2 **Filter description:** Aluminum **Control panel:** Slider **Number of speeds:** 3

C 6310
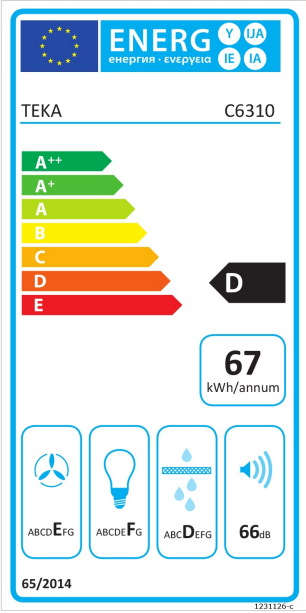
ENERGY LABEL