RTF 15810 SS Free Standing Combi Refrigerator with reversible doors

Motor Inverter | Easy 90 | LED | LongLife No Frost | Vitacare Box | Zero Box

DESCRIPTION	Free Standing Combi Refrigerator with reversible doors
LIFE STYLE	Maestro
COLOURS	
REFERENCE	REF. 113370001 EAN. 8434778015249

RTF 15810 SS

FEATURES

Free Standing top freezer refrigerator
LongLife No Frost with 2 independent circuits
Electronic adjustable thermostat
VitaCare Box drawer + ZeroBox drawer
3 safety glass shelves
Fast freezing and fast cooling function
Front adjustable feet
Glass shelves in freezer
LED Illumination
Reversible doors
Climate class: SN/T
Total capacity (gross/net): 625 / 575 litres
Twister ice maker and ice cube tray included

RTF 15810 SS

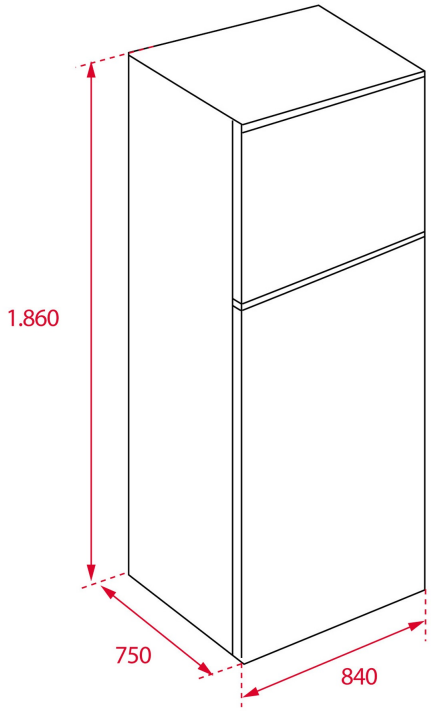

DIMENSIONS

Product height (mm): 1860
Product width (mm): 840
Product depth (mm): 750
Product length (mm):
Net weight (Kg): 114

TECHNICAL DETAILS

FITTING MEASURES

Built-in Width (mm): 560
Built-in Depth (mm): 555
Built-in height (mm): 1778

PRODUCT SHEET

Cooling system: LongLife No Frost
No Frost In Refrigerator Compartment: Yes
No Frost in chiller: Yes
No Frost in freezer compartment: Yes
Total gross capacity (litres): 625
Refrigerator compartment capacity (litres): 435
Chilling Compartment Capacity (litres): 34
Freezer compartment capacity (litres): 140
Freezer classification: 4
Freezing capacity: 10
Temperature Rise Time (h): 17
Climate class: SN/T
Noise level (dB): 44
Certificates: CE, TUV, GS, GMARK

POWER SUPPLY

Frequency (Hz): 50
Power rate (V): 220-240
Power rate (W): 193
Defrost element power (W): 220
Energy consumption (kw/day): 1,265
Plug type: UK
Cable Connection Length (cm): 2500
Inside light Consumption (W): 2

FEATURES

Type of installation: Free standing
Automatic defrosting in the refrigeration compartment: Yes
Automatic defrosting in the freezer compartment: Yes
Electronic control: Yes
Control panel: ELECTRONIC
Electronic adjustable thermostat: Yes
Fingerprint proof door: Yes
Antibacterial treatment: NO
Cooling set button: Yes
Fast freezing: Yes
Fast Cooling Function: Yes
Inner light: Yes
Type of inner light: SIDE LED
Reversible doors: Yes
Integrated handle: Yes

EQUIPMENT

Chromed bottle rack: NO
Antibacterial gasket: Yes
Multipurpose compartment: NO
Fast freezing zone: Yes
Twister ice maker: Yes
Ice cubes tray: 1
Bottle rack type: NO
Adjustable Feet Back: Yes
Adjustable feet front: Yes
Roller (rear): Yes
Roller (front): Yes
Number of shelves: 3
Refrigerator adjustable shelves: Yes
Vegetable drawers: 1