DFS 24610 WH 45 cm free standing dishwasher HomeCare Series with 9 place settings and 6 washing programs

Eco Function

Extra Dry function

DESCRIPTION	45 cm free standing dishwasher HomeCare Series with 9 place settings and 6 washing programs
LIFE STYLE	Maestro
COLOURS	
REFERENCE	REF. 114320002 EAN. 8434778014006

DFS 24610 WH

FEATURES

Free standing Dishwasher
Electronic control panel
Capacity: 9 plate settings
Washing programs: 6
Washing temperatures: 45°, 50°, 55°, 65°, 70°C
FlexiSet 2 lower basket
Special programs: GlassCare, Intensive program, ECO program, 1-Hour, Whisper program
Special functions: Half load, Express, ExtraDry
AquaSafe safety system
Low salt and rinse indicator
Adjustable upper basket
Delay timer: 1-24 hours
Noise level: 49 dBA
Sliding Detergent drawer
Column installation

DFS 24610 WH

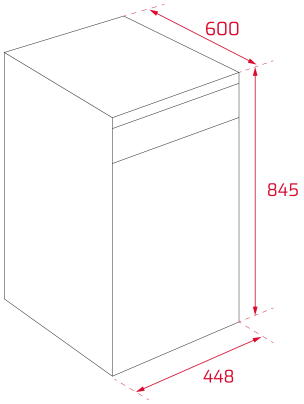

DIMENSIONS

Product height (mm): 845
Product width (mm): 448
Product depth (mm): 600
Product length (mm):
Net weight (Kg): 36,5

TECHNICAL DETAILS

PRODUCT SHEET

Capacity (Place Settings): 9
Energy consumption (kWh/year): 215
Power consumption (Kwh): 0,75
Water consumption (litres/year): 2660
Water consumption (litres): 9.5
Standard program: ECO
Standard cycle duration (minutes): 235
Noise level (dB): 49
Certificates: GS;CE;EMC;LVD;CB

POWER SUPPLY

Frequency (Hz): 50
Power rate (V): 220
Plug type: EU
Cable Connection Length (cm): 150
Maximum Nominal Power (W): 2100
Power of heating element (W): 1800
Water outlet hose length (m): 1.38
Water inlet hose length (m): 1.5

FEATURES	**Type of installation:** Free standing **Control panel:** Electronic buttons **Number of programs:** 6 **Number Of Washing Temperatures:** 5 **Water softener:** Yes **Microfilter:** Yes **Installation in column:** Yes
SAFETY SYSTEMS	**Internal Leakage Control:** Yes **Child lock:** Yes
CONTROL INDICATOR LIGHTS	**Low Salt Aid indicator:** Yes **Low Rinse Aid indicator:** Yes **Selected program indicator:** Yes **Remaining time:** Yes **End of program acoustic alarm:** Yes **End of program visual alarm:** Yes
SPECIAL FUNCTIONS	**1 Hour program:** Yes **Economic program:** Yes **Intense program:** Yes **Half load:** Yes **Delayed Timer (h):** 1-24 HOURS

DFS 24610 WH
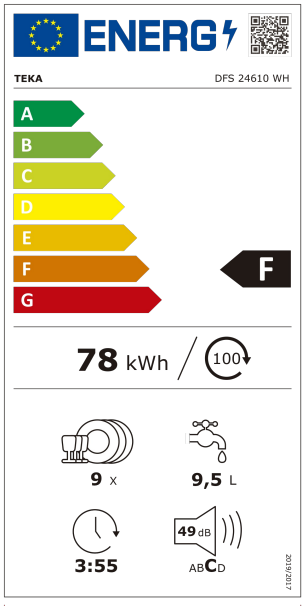
ENERGY LABEL