TRB 84300 TCS Vitroceramic hob 80 cm

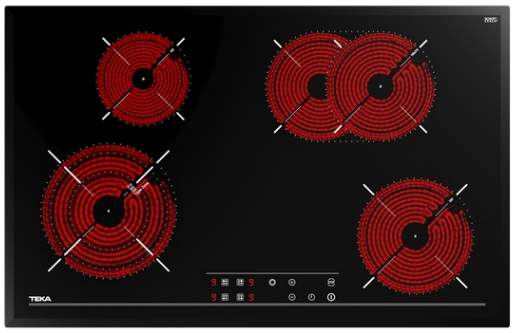

Autolock

Power Plus

DESCRIPTION	Vitroceramic hob 80 cm
LIFE STYLE	Total
COLOURS	
REFERENCE	REF. 112540000 EAN. 8434778002348

TRB 84300 TCS

FEATURES

Urban Colors Edition
Vitroceramic hob
Touch Control
4 cooking zones
1 high lights Ø 170 x 265 mm
1 high lights Ø 120/180/210 mm
1 high lights Ø 180 mm
1 high lights Ø 145 mm
Cooking timer
Power plus
Child lock
Residual heat indicator
Maximum nominal power 7500 W

TRB 84300 TCS

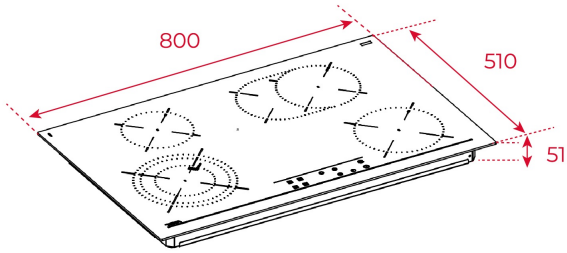

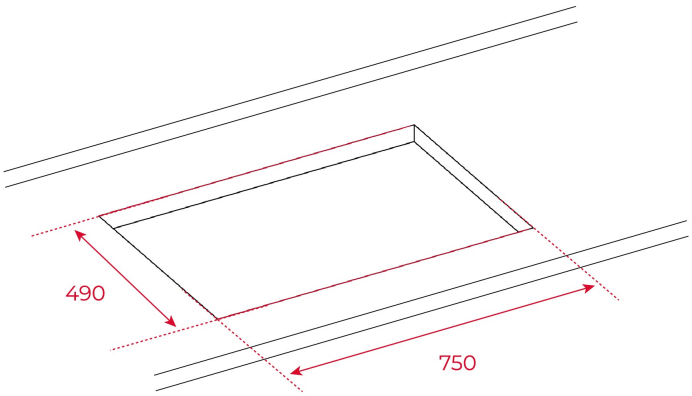

DIMENSIONS

Product height (mm): 51
Product width (mm): 800
Product depth (mm): 510
Product length (mm):
Net weight (Kg): 10,5

TECHNICAL DETAILS

FITTING MEASURES	**Built-in Width (mm):** 750 **Built-in Depth (mm):** 490 **Built-in height (mm):** 47
FEATURES	**Number of electric power levels:** 9
ELECTRIC CONNECTION	**Frequency (Hz):** 50/60 **Power rate (V):** 230 **Cable Connection Length (cm):** 110 **Maximum Nominal Power (W) (Electric hob):** 7500
COOKING ZONES	**Cooking Zones:** 4 **Energy consumption for the whole hob, Wh/Kg:** 190,3
SAFETY SYSTEMS	**Residual heat indicator (Electric hob):** Yes **Automatic safety disconnection (Auto Lock) (Electric hob):** Yes

Child lock: Yes

FINISH

Surface finishing: Full bevelled glass
Surface type: Ceramic Glass (4mm)

ACCESSORIES

Junction Kit: NO
Teppan Yaki: Optional