YZC 32600 TeppanYaki VarioPro Series

Easy
installation

DESCRIPTION	TeppanYaki VarioPro Series
LIFE STYLE	Maestro
COLOURS	
REFERENCE	REF. 112660000 EAN. 8434778014846

YZC 32600

FEATURES

VarioPro Series
Modular teppanyaki hob
Frontal control knobs with ergonimic design
2 cooking zones
2 zones Ø 376 X 118 mm
Ceramic glass surface
Easy installation kit
Maximum nominal power 2400 W

YZC 32600

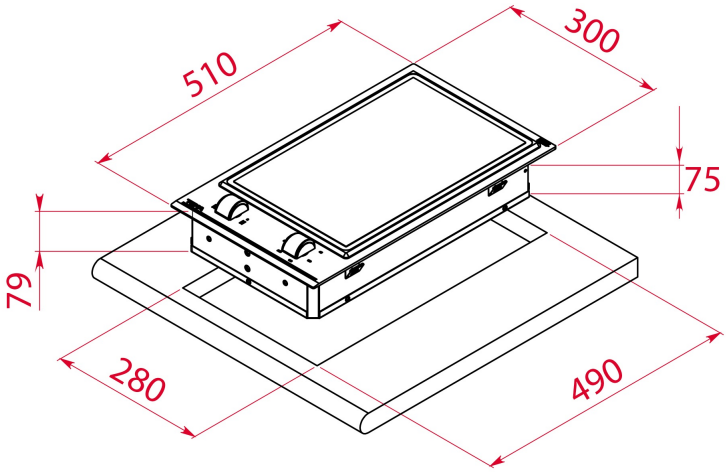

DIMENSIONS

Product height (mm): 79
Product width (mm): 300
Product depth (mm): 510
Product length (mm):
Net weight (Kg): 9,3

TECHNICAL DETAILS

FITTING MEASURES	**Built-in Width (mm):** 280 **Built-in Depth (mm):** 490 **Built-in height (mm):** 75
FEATURES	**Number of electric power levels:** 6
ELECTRIC CONNECTION	**Frequency (Hz):** 50/60 **Power rate (V):** 220-240 **Cable Connection Length (cm):** 100 **Maximum Nominal Power (W) (Electric hob):** 2400
COOKING ZONES	**Cooking Zones:** 2
FINISH	**Surface finishing:** Front bevelled glass **Surface type:** Ceramic Glass (4mm) **Easy installation system:** Yes

ACCESSORIES	**Junction Kit:** Optional **Teppan Yaki:** NO