# **AirFry HLB 8416 BK** Multifunction SurroundTemp oven with special AirFry function

70L | Plus Extension Telescopic Guide | HydroClean | SoftClose | SurroundTemp

| | |
|---|---|
| **DESCRIPTION** | Multifunction SurroundTemp oven with special AirFry function |
| **LIFE STYLE** | Maestro |
| **COLOURS** | |
| **REFERENCE** | REF. 111000045<br>EAN. 8434778017427 |

# AirFry HLB 8416 BK

**FEATURES**

AirFry oven
Urban Colors Edition
Multifunction SurroundTemp oven
9 cooking functions
Special FryMaster Box to cook without oil
Automatic HydroClean system
Touch control display with knobs
Electronic timer (Delay/Start function)
Chrome supports with 5 cooking levels
Removable triple glazed door
SoftClose system
Children safety lock
Manual quick preheating
Anti-tip deep tray
Capacity (gross/net): 71 / 70 litres

# AirFry HLB 8416 BK

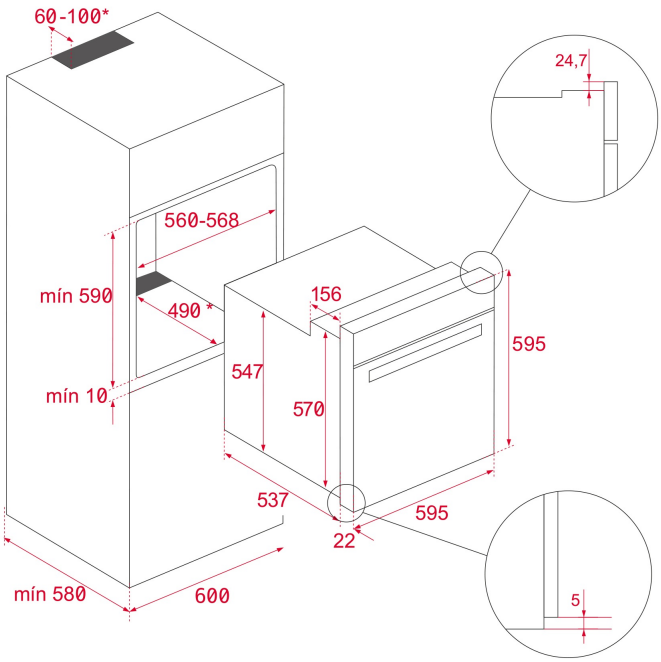


## DIMENSIONS

**Product height (mm):** 595
**Product width (mm):** 595
**Product depth (mm):** 537+22
**Product length (mm):**
**Net weight (Kg):** 28

## TECHNICAL DETAILS

### FEATURES

**Number of cavities:** 1
**Type of inner light:** Halogen
**Inside light position:** RIGHT TOP CORNER
**Enamelled cavity:** Yes
**Min. Temperature Regulator (ºC):** 50
**Max. Temperature Regulator (ºC):** 250
**Function selector:** 11+0
**Number of cooking functions:** 9
**Top + Bottom function:** Yes
**Grill function:** Yes
**MaxiGrill function:** Yes
**MaxiGrill + Fan function:** Yes
**Bottom function:** Yes
**Bottom + TURBO (Pizza) function:** Yes
**Turbo function:** Yes
**ECO function:** Yes
**Mechanical quick heating:** Yes
**Touch Control Programmer:** Yes
**Knobs type:** MMX FIX knurling printed
**Removable chromed tray guides:** Yes
**Number of guide levels:** 5
**Easy slide telescopic guides:** Yes

**SoftClose:** Yes

## ELECTRIC CONNECTION

**Maximum Nominal Power (W):** 3215
**Frequency (Hz):** 50/60
**Power rate (V):** 220-240
**Cable Connection Length (cm):** 150
**Plug:** Yes
**Inside light Consumption (W):** 25

## ENERGY CONSUMPTION

**Energy consumption per cycle in conventional mode (kWh):** 0.81
**Energy consumption per cycle in fan-forced convection mode (kWh):** 0,68
**Bottom Heating Element (W):** 1150
**Grill (W):** 1400
**Maxi Grill (W):** 2500
**Traditional (W):** 2550
**Turbo (W):** 2000
**Multifunction Turbo (W):** 22
**Cooling Fan Motor (W):** 18

## SAFETY SYSTEMS

**Panel blocking system:** Yes
**Grill protection:** Yes
**Anti-tip tray system:** Yes
**Safety Thermostat:** Yes

## CLEANING SYSTEM

**Crystal Clean Enamel (Slippery):** Yes
**Hydroclean PRO:** Yes

## ACCESSORIES

**Baking Tray:** 1
**Deep Tray (50 mm):** 1
**Standard grid:** 1

## ENERGY EFFICIENCY

**Energy Efficiency Class:** A+
**Energy Efficiency Index (EEI):** 81

# AirFry HLB 8416 BK
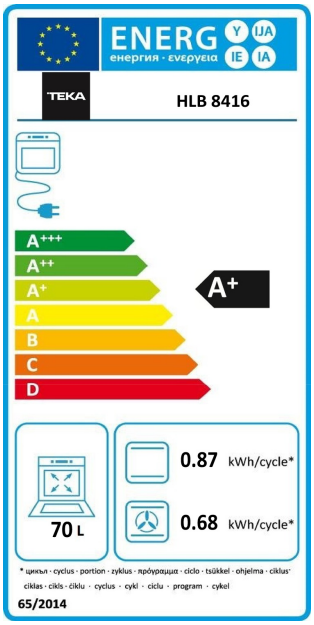
## ENERGY LABEL