HSB 610 60cm Multifunction Oven with HydroCleanECO

70L

Plus Extension Telescopic Guide

HydroClean

DESCRIPTION	60cm Multifunction Oven with HydroCleanECO
LIFE STYLE	Total
COLOURS	
REFERENCE	REF. 41560115 EAN. 8421152157695

HSB 610

FEATURES

Multifunction oven
6 cooking functions
HydroClean system
Mechanical control knobs
Mechanical timer
Chrome supports with 5 cooking levels
Easy slide telescopic guides
Removable double glazed door
Manual quick preheating
Anti-tip deep tray
Capacity (gross/net): 71 / 70 litres

HSB 610

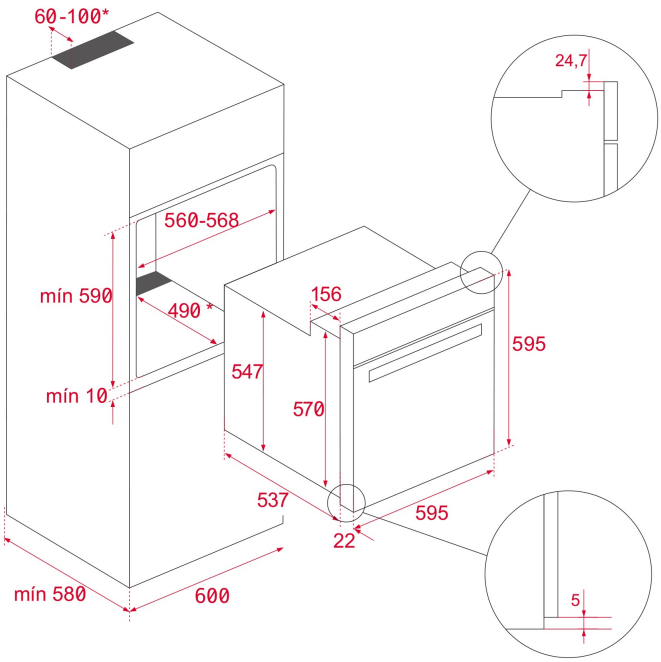

DIMENSIONS

Product height (mm): 595
Product width (mm): 595
Product depth (mm): 537+22
Product length (mm):
Net weight (Kg): 27

TECHNICAL DETAILS

FEATURES

Certificates: N / CE / CCA / CB/ EAC
Number of cavities: 1
Type of inner light: Halogen
Inside light position: RIGHT TOP CORNER
Enamelled cavity: Yes
Min. Temperature Regulator (ºC): 50
Max. Temperature Regulator (ºC): 250
Function selector: 7+0
Number of cooking functions: 6
Grill + Bottom function: Yes
Grill function: Yes
Grill + Bottom + Fan function: Yes
Bottom function: Yes
ECO function: Yes
Mechanical quick heating: Yes
Minute Minder: Yes
Knobs type: MMX FIX knurling
Removable chromed tray guides: Yes
Number of guide levels: 5
Easy slide telescopic guides: Yes

ELECTRIC CONNECTION	**Maximum Nominal Power (W):** 2615 **Frequency (Hz):** 50/60 **Power rate (V):** 220-240 **Cable Connection Length (cm):** 110 **Inside light Consumption (W):** 25
ENERGY CONSUMPTION	**Energy consumption per cycle in conventional mode (kWh):** 0.82 **Energy consumption per cycle in fan-forced convection mode (kWh):** 0,71 **Bottom Heating Element (W):** 1150 **Grill (W):** 1400 **Traditional (W):** 2550 **Multifunction Turbo (W):** 22 **Cooling Fan Motor (W):** 18
SAFETY SYSTEMS	**Grill protection:** Yes **Anti-tip tray system:** Yes **Safety Thermostat:** Yes
CLEANING SYSTEM	**Crystal Clean Enamel (Slippery):** Yes **Hydroclean ECO:** Yes
ACCESSORIES	**Deep Tray (50 mm):** 1 **Standard grid:** 1
ENERGY EFFICIENCY	**Energy Efficiency Class:** A **Energy Efficiency Index (EEI):** 84,7

HSB 610
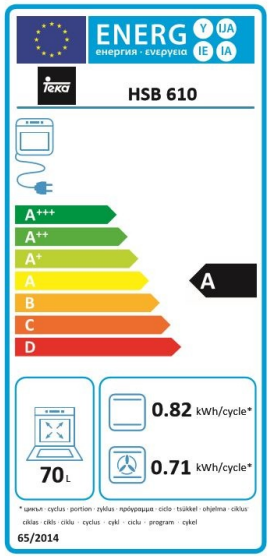
ENERGY LABEL