IN 914 Kitchen Tap Mixer with high swivel spout and anti-scale aerator

Anti-Scale Aerator

Swivel Spout

DESCRIPTION	Kitchen Tap Mixer with high swivel spout and anti-scale aerator
LIFE STYLE	Easy
COLOURS	
REFERENCE	REF. 5391412 EAN. 8421152091487

IN 914

FEATURES

High spout kitchen tap
Cast swivel spout
Anti-scale aerator
Cartridge with ceramic discs of high resistance
Highly precise temperature control
Greater handling sensitivity with smoother movements
3/8" flexible inlet pipes

IN 914

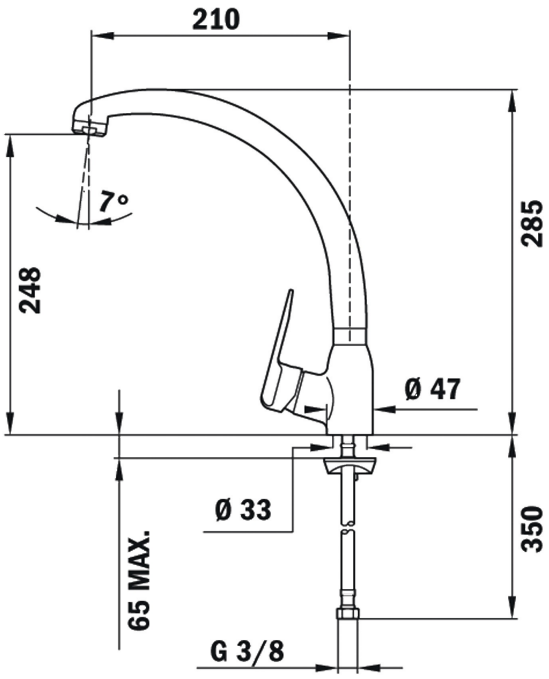

DIMENSIONS

Product height (mm): 285
Product width (mm):
Product depth (mm):
Product length (mm):
Net weight (Kg): 1,52

TECHNICAL DETAILS

MODELS	**Type of installation:** Free standing