FO 937 Semi-professional Kitchen Tap FO 937 black tube

Saving Water | Anti-Scale Aerator | Pull Down Shower | Resistance | Swivel Spout

DESCRIPTION	Semi-professional Kitchen Tap FO 937 black tube
LIFE STYLE	Maestro
COLOURS	
REFERENCE	REF. 62937020FN EAN. 8421152139714

FO 937

FEATURES

High spout kitchen tap
Swivel and flexible spout
Anti-scale aerator
Pull-down shower 1 function: aerated spray
High resistant flexible rubber tube
Stainless steel flexible hose
Cartridge with ceramic discs of high resistance
Highly precise temperature control
Greater handling sensitivity with smoother movements
3/8" flexible inlet pipes

FO 937

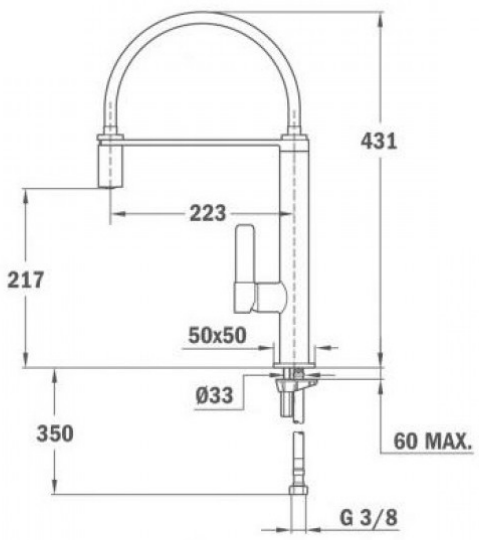

DIMENSIONS

Product height (mm): 431
Product width (mm):
Product depth (mm):
Product length (mm):
Net weight (Kg): 2,4

TECHNICAL DETAILS

MODELS	**Type of installation:** Free standing