Stage 90 D 2B Inset stainless steel sink with two bowls

Antibacterial

Lifetime warranty

DESCRIPTION	Inset stainless steel sink with two bowls
COLOURS	
REFERENCE	REF. 40108100 EAN. 8421152089774

Stage 90 D 2B

FEATURES

Stage Series
Stainless steel sink
Two bowls
Inset installation
3½" manual basket waste with siphon
190 mm deep bowls
90 cm base unit

Stage 90 D 2B

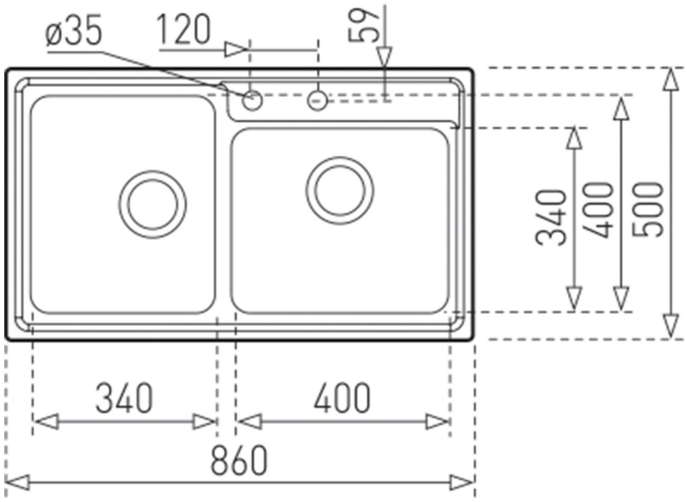

DIMENSIONS

Product height (mm):
Product width (mm): 500
Product depth (mm): 190
Product length (mm): 860
Net weight (Kg): 5,8

TECHNICAL DETAILS

MAIN BOWL	**Main Bowl Length (mm):** 340 **Main Bowl Width (mm):** 400 **Main Bowl Depth (mm):** 190
OTHER FEATURES	**Material:** Stainless Steel **Type of installation:** Inset **Number of tap holes:** 1 **Valve hole type:** 3½" **Overflow hole:** Round **Sink Bowl / Top thickness (mm):** 0,8 / 0,8
OTHERS	**Base unit (cm):** 90
SECONDARY BOWL	**Secondary Bowl Length (mm):** 400 **Secondary Bowl Width (mm):** 340 **Secondary Bowl Depth (mm):** 190

SINK LAY OUT	**Number of bowls:** 2 **Number of drainers:** 0 **Drainer position:** Right
ACCESSORIES	**Soundproof:** Yes **Installation clips:** Yes **Siphon:** Yes