Stage 60 B 1½B 1D Inset sink One bowl and one drainer

Antibacterial

Lifetime warranty

DESCRIPTION	Inset sink One bowl and one drainer
COLOURS	
REFERENCE	REF. 40108301 EAN. 8421152095720

Stage 60 B 1½B 1D

FEATURES

Stage Series
Stainless steel sink
One bowl, one auxiliary bowl and one drainer
Inset installation
3½" automatic basket waste with siphon
190 and 130 mm deep bowls
60 cm base unit

Stage 60 B 1½B 1D

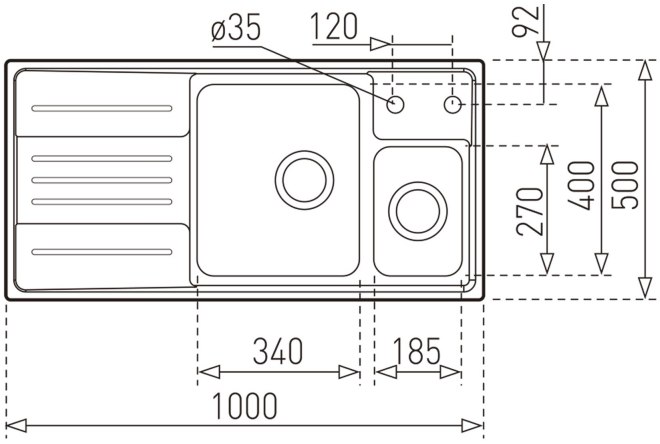

DIMENSIONS

Product height (mm):
Product width (mm): 500
Product depth (mm): 190
Product length (mm): 1000
Net weight (Kg): 5,6

TECHNICAL DETAILS

MAIN BOWL	**Main Bowl Length (mm):** 340 **Main Bowl Width (mm):** 400 **Main Bowl Depth (mm):** 190
OTHER FEATURES	**Material:** Stainless Steel **Type of installation:** Inset **Number of tap holes:** 2 **Valve hole type:** 3½" **Overflow hole:** Round **Sink Bowl / Top thickness (mm):** 0,8 / 0,8
OTHERS	**Base unit (cm):** 60
SECONDARY BOWL	**Secondary Bowl Length (mm):** 185 **Secondary Bowl Width (mm):** 270 **Secondary Bowl Depth (mm):** 130

SINK LAY OUT	**Number of bowls:** 1 **Number of drainers:** 1 **Drainer position:** Reversible
ACCESSORIES	**Soundproof:** Yes **Installation clips:** Yes **Siphon:** Yes