Square 2B 560 TG Undermount Tegranite sink with two bowls

200mm depth | Colour Intensity | Easy Clean | Food safe | High resistance

DESCRIPTION	Undermount Tegranite sink with two bowls
LIFE STYLE	Maestro
COLOURS	
REFERENCE	REF. 115260031 EAN. 8434778007299

Square 2B 560 TG

FEATURES

Tegranite+ sink
Two bowls
Undermount installation
3½" manual basket waste with siphon
200 and 155 mm deep bowls
60 cm base unit

Square 2B 560 TG

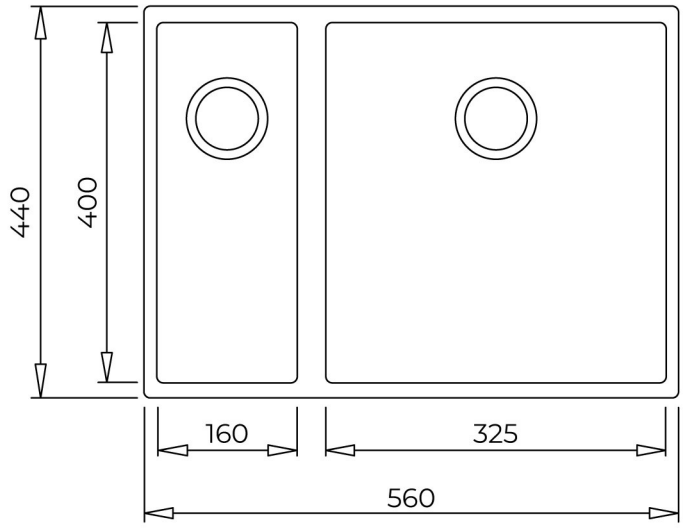

DIMENSIONS

Product height (mm):
Product width (mm): 440
Product depth (mm): 200
Product length (mm): 560
Net weight (Kg): 11,27

TECHNICAL DETAILS

MAIN BOWL	**Main Bowl Length (mm):** 325 **Main Bowl Width (mm):** 400 **Main Bowl Depth (mm):** 200
OTHER FEATURES	**Material:** Tegranite+ **Type of installation:** Undermount **Valve hole type:** 3½" **Overflow hole:** Round **Sink Bowl / Top thickness (mm):** 8,0
OTHERS	**Base unit (cm):** 60
SECONDARY BOWL	**Secondary Bowl Length (mm):** 160 **Secondary Bowl Width (mm):** 400 **Secondary Bowl Depth (mm):** 155
SINK LAY OUT	**Number of bowls:** 2

	Number of drainers: 0
ACCESSORIES	**Installation clips:** Yes **Siphon:** Yes