ARN 938 Niederdruck single lever Kitchen Tap with pullout shower

Anti-Scale Aerator

Pull Out Shower

Resistance

Swivel Spout

Easy_Quick

DESCRIPTION	Niederdruck single lever Kitchen Tap with pullout shower
LIFE STYLE	Easy
COLOURS	
REFERENCE	REF. 116020002 EAN. 8434778003178

ARN 938

FEATURES

High spout pull-out kitchen tap
Low pressure cartridge
Swivel spout
Anti-scale aerator
Pull-out 1 function: normal
Easy-Quick fixation system
3/8" flexible inlet pipes

ARN 938

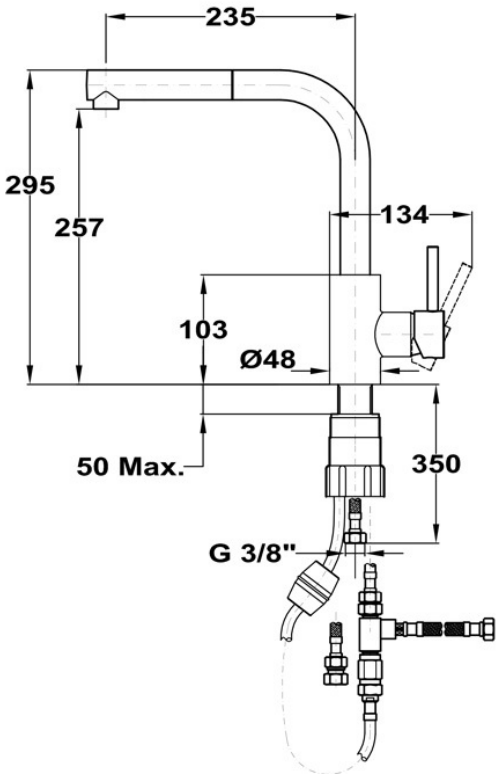

DIMENSIONS

Product height (mm):
Product width (mm):
Product depth (mm):
Product length (mm):
Net weight (Kg): 1,34

TECHNICAL DETAILS

MODELS	**Type of installation:** Free standing