Nova 60 L-TG 1B 1D Inset Nova Series sink with one bowl and one drainer

200mm depth | Colour Intensity | Easy Clean | Food safe | High resistance

DESCRIPTION	Inset Nova Series sink with one bowl and one drainer
LIFE STYLE	Maestro
COLOURS	
REFERENCE	REF. 115330059 EAN. 8434778023909

Nova 60 L-TG 1B 1D

FEATURES

Nova Series
Tegranite+ sink
One bowl and one drainer
Inset installation
3½” automatic waste basket with siphon
HelixPro waste basket
200 mm deep bowl
60 cm base unit

Nova 60 L-TG 1B 1D

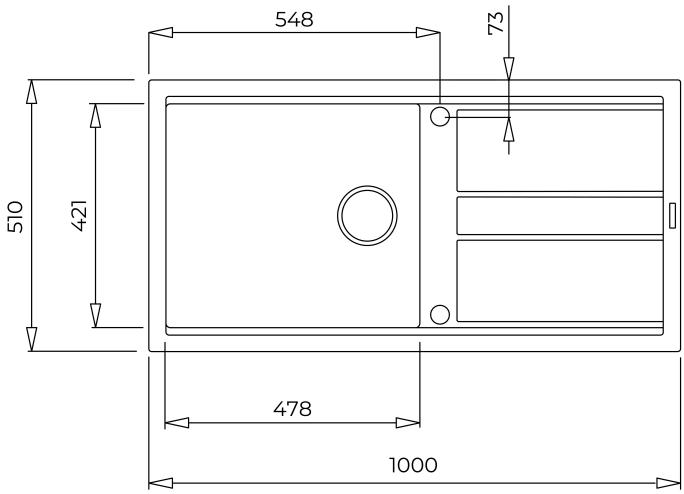

DIMENSIONS

Product height (mm):
Product width (mm): 510
Product depth (mm):
Product length (mm): 1000
Net weight (Kg): 15,68

TECHNICAL DETAILS

MAIN BOWL	**Main Bowl Length (mm):** 478 **Main Bowl Width (mm):** 421 **Main Bowl Depth (mm):** 200
OTHER FEATURES	**Material:** Tegranite+ **Type of installation:** Inset **Number of tap holes:** Pre-Drilled **Valve hole type:** 3½" **Overflow hole:** Round
OTHERS	**Base unit (cm):** 60
SINK LAY OUT	**Number of bowls:** 1 **Number of drainers:** 1 **Drainer position:** Reversible

ACCESSORIES	**Installation clips:** Yes **Siphon:** Yes