RV 250 B EU Wine cooler for 25 bottles and adjustable temperature control

Inverter

Motor Inverter

LED

LED

DESCRIPTION	Wine cooler for 25 bottles and adjustable temperature control
LIFE STYLE	Easy
COLOURS	
REFERENCE	REF. 40682004 EAN. 8421152159088

RV 250 B EU

FEATURES

Freestanding wine cooler
Electronic control panel
Capacity: 25 bottles
Thermoelectric cooling technology
Optical Temperature alarm
Adjustable temperature for red and white wines (5-20ºC)
10 wooden shelves
LED illumination
A
Climate class: N
Total gross capacity: 97 liters

RV 250 B EU

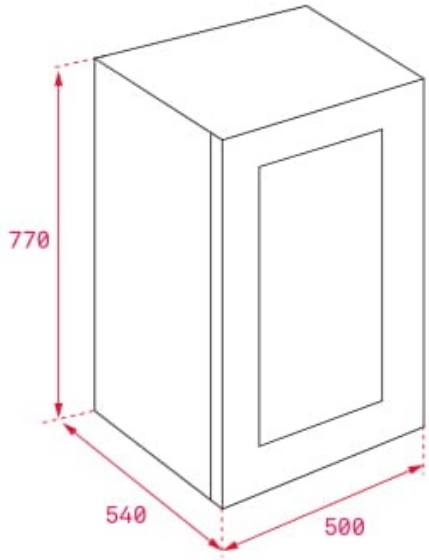

DIMENSIONS

Product height (mm): 770
Product width (mm): 500
Product depth (mm): 565
Product length (mm):
Net weight (Kg): 37

TECHNICAL DETAILS

PRODUCT SHEET

Cooling system: Defrost
Total gross capacity (litres): 87
Annual Consumption (kWh/year): 128
Climate class: N
Noise level (dB): 42
Certificates: CE, CB

POWER SUPPLY

Frequency (Hz): 50
Power rate (V): 220-240
Power rate (W): 90
Energy consumption (kw/day): 0,35
Inside light Consumption (W): 1,5

FEATURES

Type of installation: Free standing
Number of bottles (wine cooler): 25
Automatic defrosting in the refrigeration compartment: Yes
Control panel: ELECTRONIC
Electronic adjustable thermostat: Yes
Inner light: Yes
Type of inner light: LED
Integrated handle: Yes

CONTROL INDICATOR LIGHTS	**Visual alarm:** Yes
EQUIPMENT	**Bottle rack type:** WOOD **Adjustable Feet Back:** Yes **Adjustable feet front:** Yes **Number of shelves:** 5

RV 250 B EU
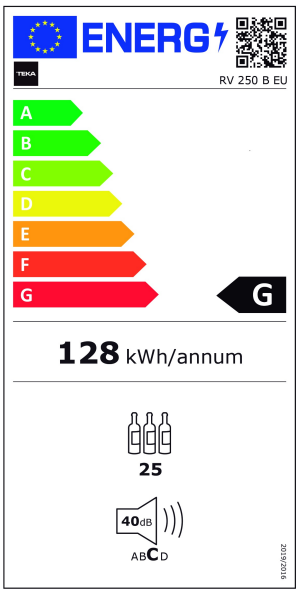
ENERGY LABEL