FlexLinea RS15 71.40 Fortinox 3-in-1 installation stainless steel sink with Fortinox finish

200mm depth | Antibacterial | R15, easy to clean

DESCRIPTION	3-in-1 installation stainless steel sink with Fortinox finish
COLOURS	
REFERENCE	REF. 115000063 EAN. 8434778025279

FlexLinea RS15 71.40 Fortinox

FEATURES

FlexLinea Series
Stainless steel sink with satin texture
Fortinox finish, 20% more resistant
One bowl
3-in-1 installation possibilities: top, flush or undermount
Easy clean radius R15 corners
Decorative SQ cover
SilentSmart, 50% less noise
3½" SQ manual basket waste and siphon
200 mm deep bowl
80 cm base unit

FlexLinea RS15 71.40 Fortinox

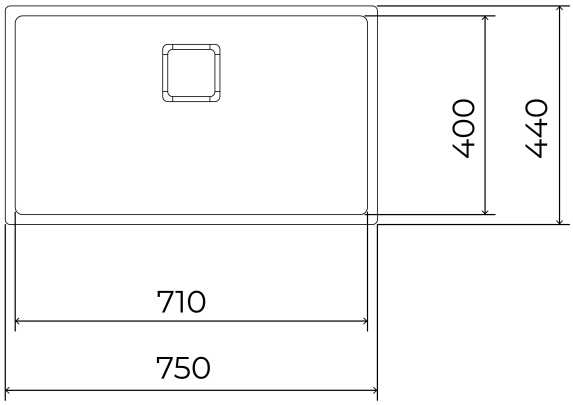

DIMENSIONS

Product height (mm):
Product width (mm): 440
Product depth (mm):
Product length (mm): 750
Net weight (Kg): 5,26

TECHNICAL DETAILS

MAIN BOWL	**Main Bowl Length (mm):** 710 **Main Bowl Width (mm):** 400 **Main Bowl Depth (mm):** 200
OTHER FEATURES	**Material:** Stainless Steel **Type of installation:** Flush,Top,Undermount **Valve hole type:** 3½" SQUARED **Overflow hole:** Rectangular **Sink Bowl / Top thickness (mm):** 1
OTHERS	**Base unit (cm):** 80
SINK LAY OUT	**Number of bowls:** 1 **Number of drainers:** 0
ACCESSORIES	**Soundproof:** Yes

SilentSmart: Yes
Installation clips: Yes
Siphon: Yes