EX 70.1 3G AI AL CI

70cm Gas Hob with 3 high efficiency Butane gas cooking zones and cast iron grids

Integrated auto-ignition system

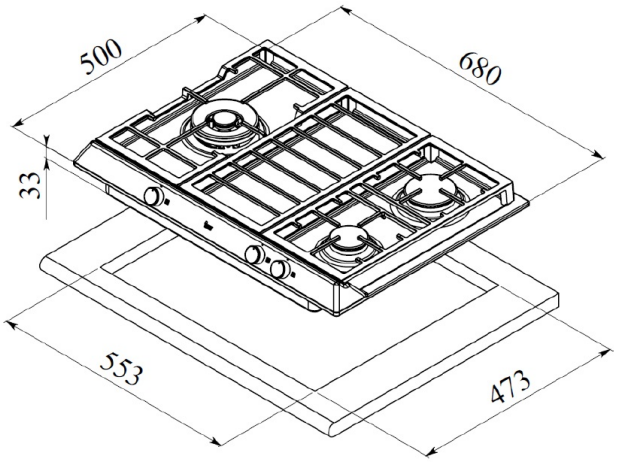

REFERENCE

REF: 112610001 EAN: 8434778002249

FEATURES

Gas hob
Frontal knobs
High Efficiency burners
3 cooking zones:
-1 double ring burner (4.00 kW)
-1 fast burner (2.8 kW)
-1 auxiliary burner (1.75 kW)
Cast iron grids with a professional look
Auto–lock safety device
Auto–ignition
Maximum nominal power: 8.55 kW
Gas typology : LPG (butane)

DIMENSIONS

Product height (mm): 33
Product width (mm): 680
Product depth (mm): 500
Product length (mm):
Net weight (Kg): 11,6

TECHNICAL DETAILS

Power rate (V): -
Frequency (Hz): -
Maximum Nominal Power (W): -

COLOURS

112610001 Stainless Steel

ENERGY EFFICIENCY

Power consumption in standby mode (W): -
Time to reach standby mode (min): -