HLB 8408 BK

Multifunction oven with EasySteam system and 9 cooking functions

70L capacity | HydroClean | SurroundTemp, extra rear resistance for a uniform cooking

REFERENCE

REF: 111000081 EAN: 8434778030983

FEATURES

Multifunction SurroundTemp oven
EasySteam special function
9 cooking functions
Automatic HydroClean system
Touch control display with knobs
Electronic timer
Chrome supports with 5 cooking levels
Removable double glazed door
Automatic disconnection security system
Manual quick preheating
Capacity (gross/net): 71 / 70 litres

DIMENSIONS

Product height (mm): 595
Product width (mm): 595
Product depth (mm): 537+22
Product length (mm):
Net weight (Kg): 28

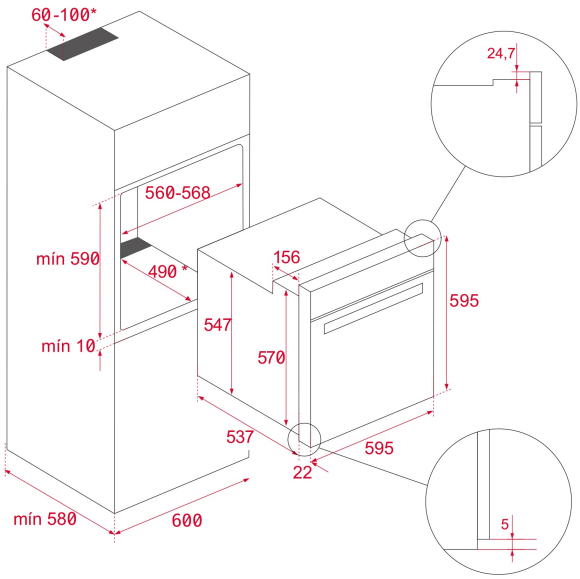

TECHNICAL DETAILS

Energy Efficiency Class: A+
Power rate (V): 220/240
Frequency (Hz): 50/60
Maximum Nominal Power (W): 3215

COLOURS

111000081 Black Glass