TR 831 HZ 80cm Vitroceramic Hob with 3 zones and Touch Control

Autolock

Power Plus function

Easy installation system

DESCRIPTION	80cm Vitroceramic Hob with 3 zones and Touch Control
LIFE STYLE	Maestro
COLOURS	
REFERENCE	REF. 10210004 EAN. 8421152086322

TR 831 HZ

FEATURES

80 cm vitroceramic hob
Touch control panel
Bevelled glass
Burst of cooking function
Stop and Go function
Security blocking
Cooking time programmer
Independent programmer of each cooking zone
Residual heat indicator
3 cooking zones :
1 triple high light (145/210/270 mm Ø)
1 high light (180 mm Ø)
1 high light (145 mm Ø)
Max. nominal power : 5700 W

TR 831 HZ

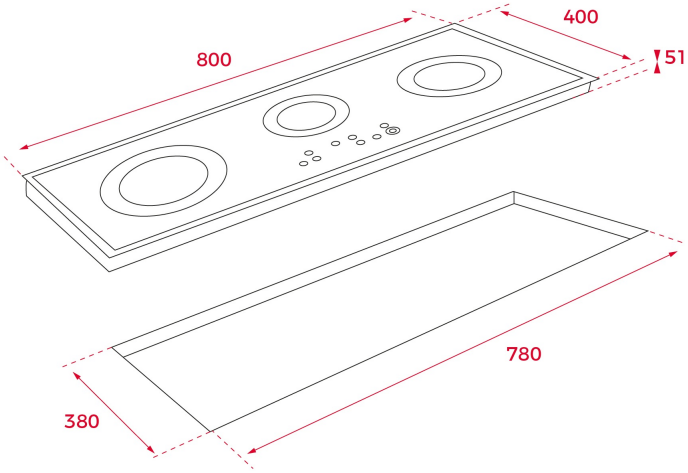

DIMENSIONS

Product height (mm): 63
Product width (mm): 800
Product depth (mm): 400
Product length (mm):
Net weight (Kg): 11

TECHNICAL DETAILS

FITTING MEASURES	**Built-in Width (mm):** 780 **Built-in Depth (mm):** 380 **Built-in height (mm):** 63
FEATURES	**Number of electric power levels:** 9
ELECTRIC CONNECTION	**Frequency (Hz):** 50/60 **Power rate (V):** 220-240 **Cable Connection Length (cm):** 110 **Maximum Nominal Power (W) (Electric hob):** 5700
COOKING ZONES	**Cooking Zones:** 3 **Energy consumption for the whole hob, Wh/Kg:** 188,7
SAFETY SYSTEMS	**Residual heat indicator (Gas):** Yes **Residual heat indicator (Electric hob):** Yes

Automatic safety disconnection (Auto Lock) (Electric hob): Yes
Safety Blocking: Yes
Child lock: Yes

FINISH

Surface finishing: Full bevelled glass
Surface type: Ceramic Glass (4mm)
Easy installation system: Yes

ACCESSORIES

Junction Kit: NO
Teppan Yaki: Optional