IB 6310 60cm Induction Hob with 3 zones and MultiSlider Touch Control

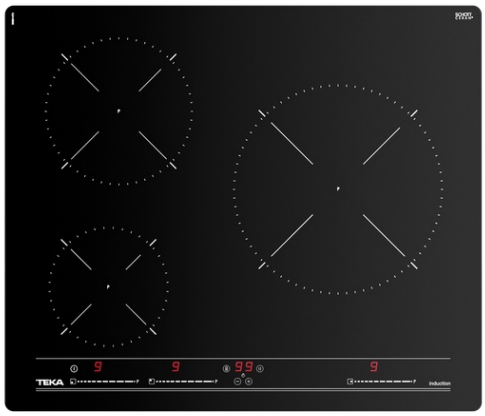

MultiSlider, for independant control of each cooking zone

Autolock

Power function

Power Plus function

Easy installation system

DESCRIPTION	60cm Induction Hob with 3 zones and MultiSlider Touch Control
LIFE STYLE	Easy
COLOURS	
REFERENCE	REF. 10210157 EAN. 8421152148013

IB 6310

FEATURES

Induction hob
MultiSlider touch control
Cooking timer
3 cooking zones:
1 induction Ø 260 mm
1 induction Ø 180 mm
1 induction Ø 145 mm
Power Plus function
Child lock
Stop & Go function
Silence mode
Residual heat indicators
Maximum nominal power : 5.900 W

IB 6310

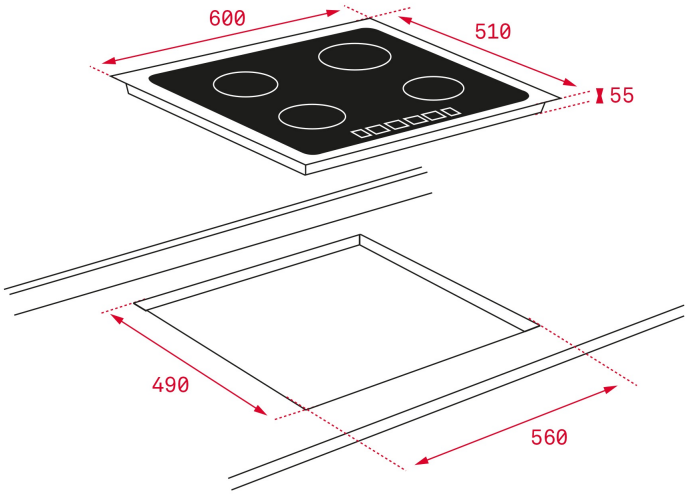

DIMENSIONS

Product height (mm): 50
Product width (mm): 600
Product depth (mm): 510
Product length (mm):
Net weight (Kg): 10,7

TECHNICAL DETAILS

FITTING MEASURES	**Built-in Width (mm):** 560 **Built-in Depth (mm):** 490 **Built-in height (mm):** 50
FEATURES	**Number of electric power levels:** 9 **Power management function:** Yes
ELECTRIC CONNECTION	**Frequency (Hz):** 50/60 **Power rate (V):** 220-240 **Cable Connection Length (cm):** 110 **Maximum Nominal Power (W) (Electric hob):** 5900
COOKING ZONES	**Cooking Zones:** 3 **Energy consumption for the whole hob, Wh/Kg:** 182
SAFETY SYSTEMS	**Residual heat indicator (Gas):** Yes

Residual heat indicator (Electric hob): Yes
Automatic safety disconnection (Auto Lock) (Electric hob): Yes
Safety Blocking: Yes
Child lock: Yes

FINISH

Surface finishing: C-edged glass
Surface type: Ceramic Glass (4mm)
Easy installation system: Yes

ACCESSORIES

Junction Kit: NO
Teppan Yaki: Optional