TKI3 145 D 82cm A+ Built-in Refrigerator

Easy 90, opening on its own axis for a perfect installation

LED lighting

DESCRIPTION	82cm A+ Built-in Refrigerator
LIFE STYLE	Total
COLOURS	
REFERENCE	REF. 40693006 EAN. 8421152114445

TKI3 145 D

FEATURES

Built-in fridge
Mechanical control panel
Manual defrost
Safety glass shelves
Door on door installation
Reversible door
Energy Class: A++
Climate Class: SN-T
Total gross capacity: 130 litres
Net capacity: 128 litres

TKI3 145 D

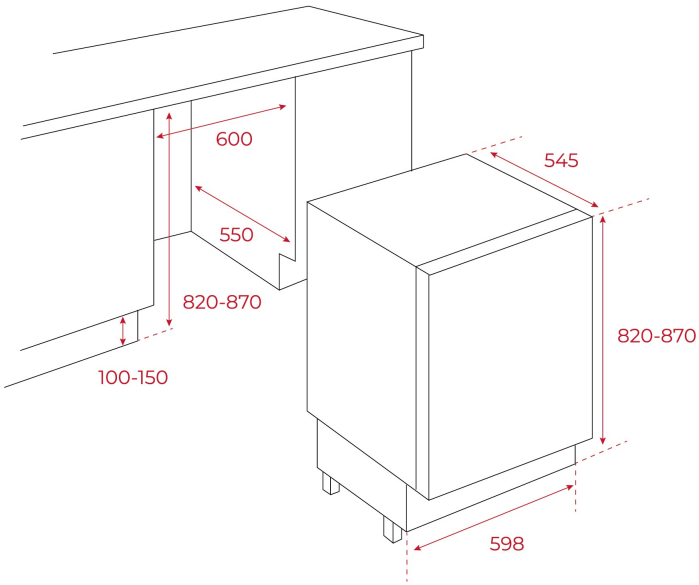

DIMENSIONS

Product height (mm): 818
Product width (mm): 595
Product depth (mm): 545
Product length (mm):
Net weight (Kg): 29

TECHNICAL DETAILS

FITTING MEASURES	**Built-in niche (cm):** 82
PRODUCT SHEET	**Cooling system:** Defrost **Total gross capacity (litres):** 130 **Refrigerator compartment capacity (litres):** 128 **Climate class:** SN/T **Noise level (dB):** 40 **Certificates:** CE
POWER SUPPLY	**Frequency (Hz):** 50 **Power rate (V):** 230 **Power rate (W):** 140 **Energy consumption (kw/day):** 0,252 **Plug type:** European **Cable Connection Length (cm):** 193
FEATURES	**Type of installation:** Built-in

Automatic defrosting in the refrigeration compartment: Yes
Control panel: Mechanical
Antibacterial treatment: NO
Cooling set button: Yes
Inner light: Yes
Type of inner light: LED BULB
Reversible doors: Yes

EQUIPMENT

Antibacterial gasket: Yes
Multipurpose compartment: NO
Bottle rack type: NO
Adjustable feet front: Yes
Number of shelves: 3
Refrigerator adjustable shelves: Yes

TKI3 145 D
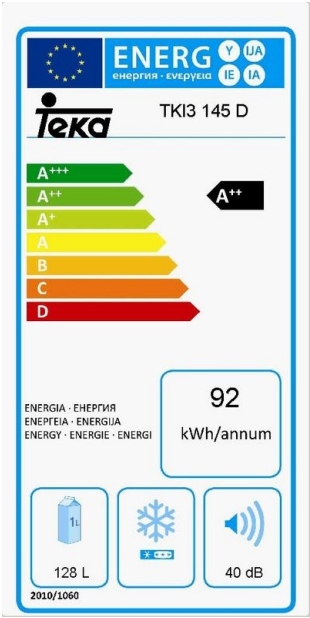
ENERGY LABEL