TK3 1490 9kg Free Standing Washer Dryer

Quick cycle program

6Kg washing capacity

9Kg washing capacity

DESCRIPTION	9kg Free Standing Washer Dryer
LIFE STYLE	Total
COLOURS	
REFERENCE	REF. 40878061 EAN. 8421152127612

TK3 1490

FEATURES

Free standing washer-dryer
Washing capacity : 9 kg
Drying capacity : 6 kg
11 washing programmes
4 drying programmes
Electronic control panel
LED display
Maximum spin speed : 1400 rpm
Fast program 12 minutes
Automatic water regulation
Delay timer 1-24h
33 cm wide porthole
Energy class A/A

TK3 1490

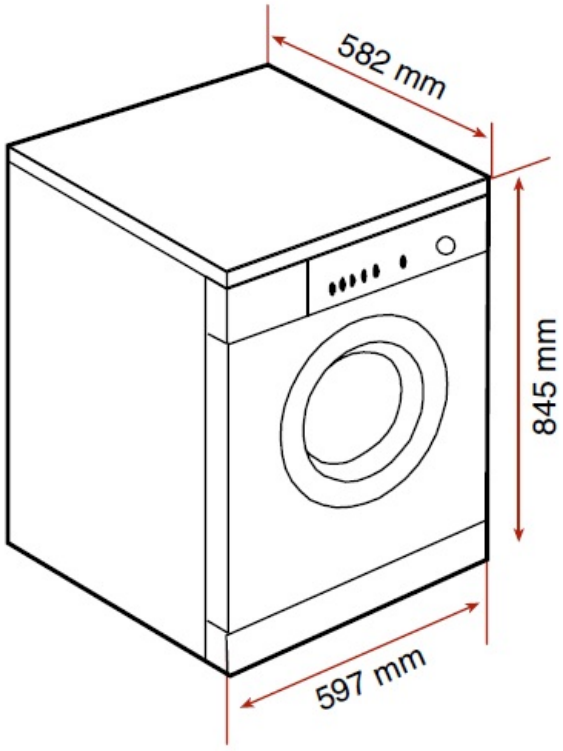

DIMENSIONS

Product height (mm): 845
Product width (mm): 597
Product depth (mm): 582
Product length (mm):
Net weight (Kg): 78

TECHNICAL DETAILS

PRODUCT SHEET

Type of installation: Free standing
Drying capacity (Kgs): 6
Energy consumption (kWh/year): 210
Water consumption (litres/year): 9800
Certificates: CE + IMQ + VDE

POWER SUPPLY

Frequency (Hz): 50
Power rate (V): 220-240
Plug type: No
Cable Connection Length (cm): No
Maximum Nominal Power (W): 2200
Nominal power motor (W): 200
Power of heating element (W): 1850

FEATURES

Stainless Steel Drum: Yes
Glass door diameter (cms): 47
Number of programs: 11
Number Of Washing Temperatures: YES
Control panel: ELECTRONIC

Electronic washing management: Yes
Child lock: Yes
Auto lock door: Yes
Cancel spin cycle button: Yes
Removable work top: Yes

CONTROL INDICATOR LIGHTS

Selected program indicator: Yes
Remaining time: Yes
Drying: Yes
Dryer timer: Yes

SPECIAL FUNCTIONS

Fast program: Yes
Fast program (minutes): 12
Economic program: Yes
Intense program: Yes
Delayed Timer (h): YES
Extra rinse: Yes
Delicate fabrics: Yes
Resistant: Yes

EQUIPMENT

Adjustable Feet Back: Yes
Adjustable feet front: Yes

TK3 1490

ENERGY LABEL

Energy — Washer-Dryer

Manufacturer	Teka
Model	TK3 1490 WD
More efficient (A–G) / Less efficient	A
Energy consumption (to wash and dry a full capacity wash load at 60°C) kWh	6.12
Washing (only) kWh	0.90
Actual energy consumption will depend on how the appliance is used	
Washing performance (A: higher G: lower)	A B C D E F G
Spin speed (rpm)	1400
Capacity (cotton) kg — Washing	9.0
Capacity (cotton) kg — Drying	6.0
Water consumption (total) ℓ	112
Noise (dB(A)re 1 pW) — Washing	58
Noise — Spinning	77
Noise — Drying	64

Further information is contained in product brochures.

Norm EN 50229

Washer-drier Label Directive No 96/60/EC.