GT LUX 75 2G AI AL 2TR 75cm Gas on glass hob with 2 cooking zones

DESCRIPTION	75cm Gas on glass hob with 2 cooking zones
LIFE STYLE	Total
COLOURS	
REFERENCE	REF. 40240120 EAN. 8421152129074

GT LUX 75 2G AI AL 2TR

FEATURES

Gas on Glass hob
2 gas burners, 3,5kW
High efficiency burners
Cast iron grids
Autoignition
Automatic safety disconnection

GT LUX 75 2G AI AL 2TR

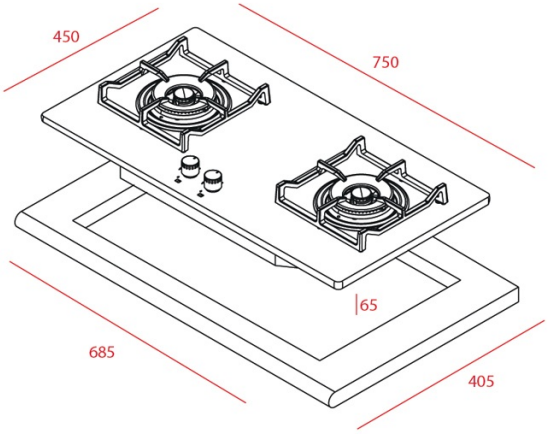

DIMENSIONS

Product height (mm):
Product width (mm):
Product depth (mm):
Product length (mm):
Net weight (Kg): 8,1