GK LUX 73.1 2G AI AL 2 DR 73cm Gas on Glass hob with frontal control knobs

DESCRIPTION	73cm Gas on Glass hob with frontal control knobs
LIFE STYLE	Easy
COLOURS	
REFERENCE	REF. 112580008 EAN. 8434778005196

GK LUX 73.1 2G AI AL 2 DR

FEATURES

Gas on Glass Hob in 73cm
Black front control knobs
Tempered Glass
2 gas burners: 2 Double ring burners 4,6 kW
Auto-lock safety device
Automatic-ignition in every burner, activated through control knobs
Large cast iron pan supports
Easy installation
Type of Gas: LPG

GK LUX 73.1 2G AI AL 2 DR

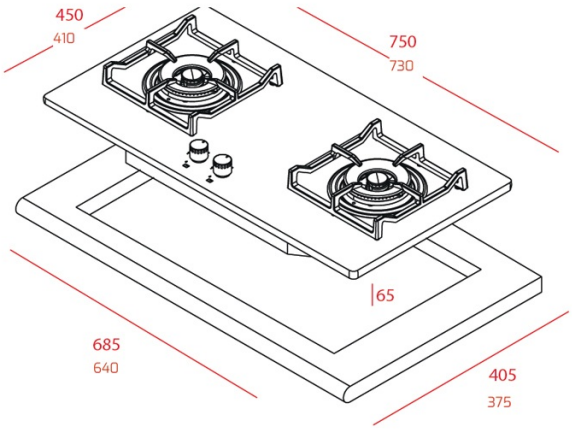

DIMENSIONS

Product height (mm):
Product width (mm):
Product depth (mm):
Product length (mm):
Net weight (Kg): 8,1