DLV 985 Urban Colors Edition 90cm Vertical Hood with Contour Rim extraction system and Touch control display

LED lighting | Rim extraction | Stop delay timer

DESCRIPTION	Urban Colors Edition 90cm Vertical Hood with Contour Rim extraction system and Touch control display
LIFE STYLE	Maestro
COLOURS	
REFERENCE	REF. 112930010 EAN. 8434778009583

DLV 985

FEATURES

Urban Colors Edition
Quadro vertical hood
Double turbine motor ECOPOWER
Extraction rim system “Contour”
Digital control Touch Control with white display
3 speeds + Intensive
Saturation filters lighting indicator
Exhaust capacity (*): min.325 m3/h – max.782 m3/h
Sound level (*): min.54 dBA – máx.65 dBA
LED light bar
Stop delay timer
Recirculation function optional (SET D10CTP)

DLV 985

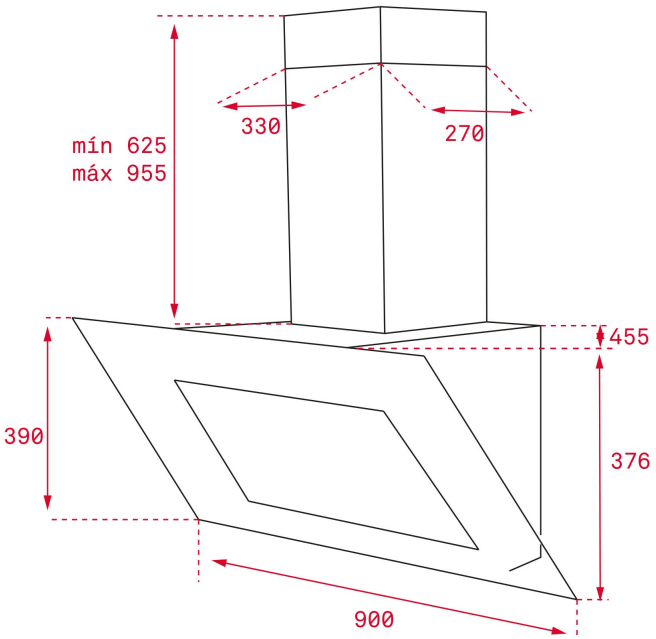

DIMENSIONS

Product height (mm): 800-1200
Product width (mm): 900
Product depth (mm): 450
Product length (mm):
Net weight (Kg): 20,27

TECHNICAL DETAILS

FEATURES

Certificates: CE; CB; Rohs
Ø Outlet (mm): 150
Type of inner light: LED
Inside light Consumption (W): 7
Plug type: Schuko plug
Power rate (V): 230
Frequency (Hz): 50
Total hood power (W): 287
Number of motors: 1
Motor power (W): 280
Air flow (Qmin) m3/h: 325
Air flow (Qmax): 614
Air flow (Qboost): 782

ACCESSORIES

Anti Return valve: Yes
Outlet reduction: Yes
Outlet extension: No
Optional Charcoal Filter: D4C
Conventional recirculation kit (opt) - w/tube cover: SET 1/N1

MODELS	**Number of filters:** 1 **Filter description:** Glass panel; aluminum filter below **Control panel:** Touch control white display **Stop delay timer:** Yes **Filter saturation indicator:** Yes **Time clock:** Yes **Number of speeds:** 3+1

DLV 985
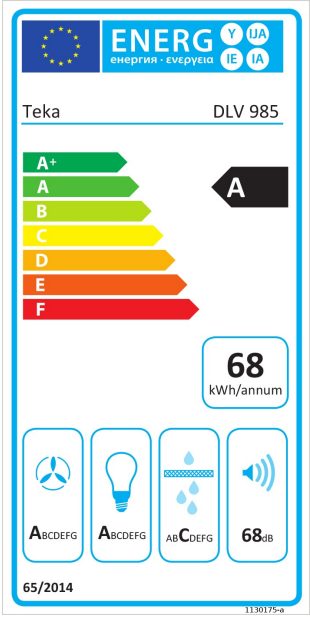
ENERGY LABEL