# EFX 30.1 FRYER

Modular fryer hob with stainless steel cooking surface, 30cm

Autolock

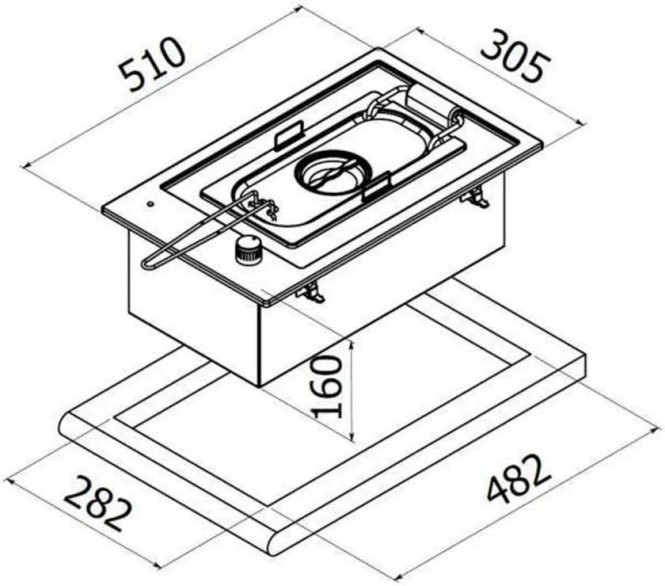


## REFERENCE

REF: 40214450 EAN: 8421152156346

## FEATURES

Modular fryer hob
Frontal control knobs
Maximum nominal power 2300 W

## DIMENSIONS

**Product height (mm):** 45
**Product width (mm):** 305
**Product depth (mm):** 510
**Product length (mm):**
**Net weight (Kg):** 7,21

## TECHNICAL DETAILS

Power rate (V): 220/240
Frequency (Hz): 50/60
Maximum Nominal Power (W): 2300

## COLOURS

40214450 Stainless steel

## ENERGY EFFICIENCY

Power consumption in standby mode (W): -
Time to reach standby mode (min): -