HLC 8471 S BK

Urban Colors Edition. Full Steam compact oven with 20 recipes and HydroClean system

48L

SoftClose

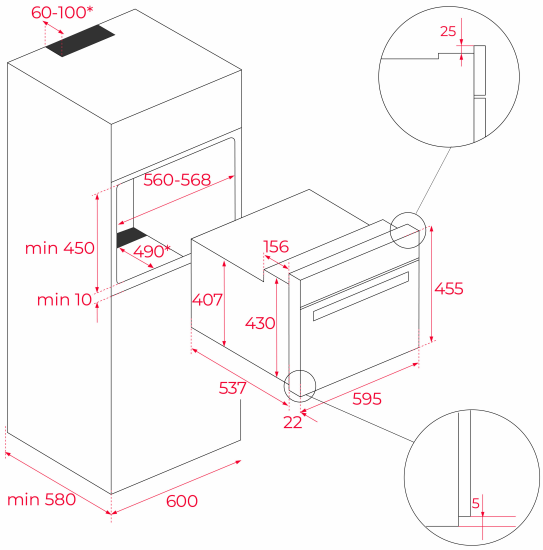

REFERENCE

REF: 111230005 EAN: 8434778013061

FEATURES

Steam oven
Temperature range 35-100 ºC
1 litre water tank
Touch control display with knobs
Electronic timer (Delay/Start function)
Sterilization and regeneration function
Chrome supports with 5 cooking levels
Removable triple glazed door
SoftClose system
Automatic disconnection security system
Children safety lock
Automatic quick preheating
Anti-tip deep tray,anti-tip gastronorm tray, reinforced grid and special grid for perforated tray
Capacity (gross/net): 49 /48 litres

DIMENSIONS

Product height (mm): 455
Product width (mm): 595
Product depth (mm): 559
Product length (mm):
Net weight (Kg): 26,5

TECHNICAL DETAILS

Energy Efficiency Class: -
Power rate (V): 220-240
Frequency (Hz): 50/60
Maximum Nominal Power (W): 3000

COLOURS

111230005	Black glass
111230001	Stone grey glass
111230001	Reflex glass
111230001	Steam grey glass